Los Angeles
World Airports

INFORMATION TECHNOLOGY INFRASTRUCTURE STANDARDS OF PRACTICE

VOLUME 3 OF 3
ADMINISTRATION APPENDICES

LAWA Information Technology Infrastructure Division
6053 West Century Blvd., Suite 200
Los Angeles, CA 90045

TABLE OF CONTENTS

1. ADMINISTRATION

1.1. GENERAL

1.1.1. Infrastructure administration includes the following non-technical topics:

- Field Survey Documentation
- Field Survey Documentation Equipment
- Safety Introduction
- Safety Introduction - Guidelines
- Deliveries
- Traffic Control
- Contractor's Request Contact information
- Contractor Access
- Request for Area Shutdowns
- Request for Utility Shutdowns
- Request for Locating Sub-surface Utilities
- Request for Tenant Construction Approvals
- Request for Tenant Request to install Antennas
- Request for Tenant Construction Inspection
- Request for CADD Standards
- Request for Space in IT Rooms
- Request for Fiber Circuits
- Request for LAWA-Internal Drafting Services
- Permits
- Quality Assurance
- Inspection
- Labeling Requirements
- As-built Documentation
- Sensitive Security Information
- WireCAD Cable Management
- Acceptance Testing and Commissioning
- Training
- Warranties
- Project Closeout

1.2. FIELD SURVEY DOCUMENTATION

1.2.1. All surveys of Hand Holes and Maintenance Holes shall have butterfly drawings prepared and pictures taken with a minimum 8MP camera.

1.2.2. HH and MH surveys shall use the LAWA template below.

1.2.3. GPS Lat/Long coordinates shall be taken with 12-inch accuracy for all HH and MH locations and then converted to State Plane Coordinates.

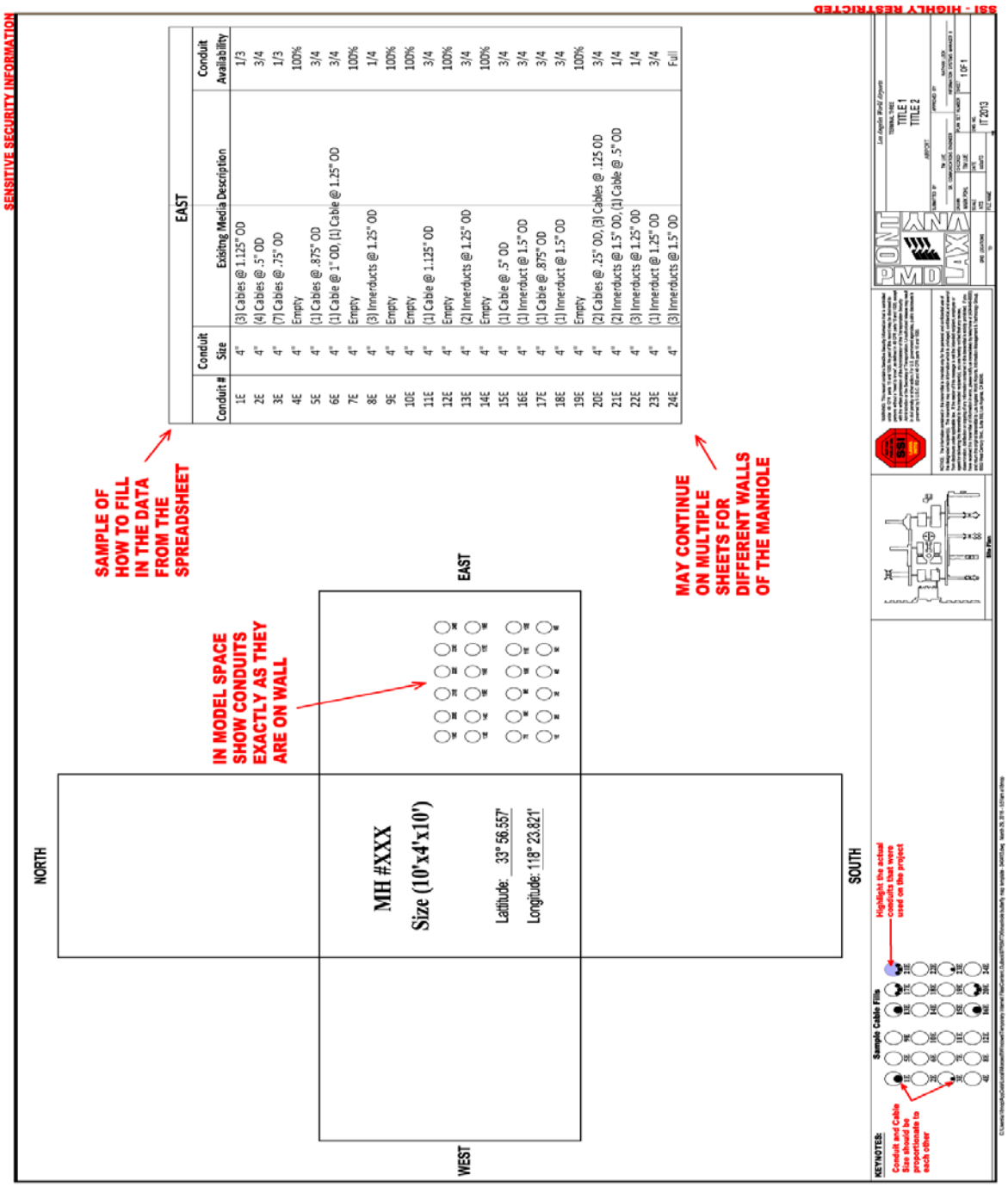

A sample of a LAWA-required Hand Hole and Maintenance Hole butterfly drawing template.

1.3. FIELD SURVEY DOCUMENTATION > EQUIPMENT

1.3.1. The following GPS locator will achieve LAWA's GPS accuracy requirements.

A Trimble Geo 7x GPS locator is pre-approved by LAWA for obtaining GPS coordinates.

1.4. SAFETY > INTRODUCTION

1.4.1. All personnel shall follow industry-standard safety guidelines as listed below under Safety Guidelines.

1.4.2. All contractors shall have a company safety program with ongoing safety classes and/or "tail gate" meetings.

1.4.3. All contractors shall provide a safety plan upon LAWA request.

1.4.4. The safety plan shall cover the topics listed below.

1.4.5. Contractors may be required to provide onsite safety training for contractor and non-contractor staff that have a need to be in the construction area – all at no charge to LAWA.

1.5. SAFETY > GUIDELINES

1.5.1. In the event of a serious illness or injury, immediately call **424-646-7911**.

1.5.2. Everyone shall make accident prevention a safety priority #1 in the conduct of Los Angeles World Airports' (LAWA) business.

1.5.3. The purpose of Safety Programs is to eliminate incidents that produce personal injury, damage or destroy equipment and facilities, and disrupt work operations.

1.5.4. To those ends:

1.5.5. General Requirements: - All personnel shall:

- Learn about all safety hazards in the work place.
- Act to minimize safety hazards in the work place.
- Use proper safety practices and procedures.
- Keep the work area clean by cleaning up all spills of liquids, broken glass, and litter on the floor immediately.
- Use all required personal protective equipment (PPE). Protective equipment may include hardhat, safety glasses/goggles, face shields, respirators, hearing protection, gloves, plastic aprons, arm guards, boots, etc.
- Use all personal and equipment safeguards properly.
- Get help to lift heavy objects.
- Perform every task with due regard for one's personal safety, that of fellow employees, and of the public.
- Report to supervisors all unsafe working conditions or practices observed.
- Notify their manager and their Human Resources Representative of any work-related accident and follow the required documents and procedures.

1.5.6. First Aid Requirements: - All personnel shall:

- Know where the First Aid kits are located.
- Know where emergency eyewash stations are located.

1.5.7. Working Alone Requirements: - All personnel shall:

- Work in a team of al least two and be within sight and sound of each other when working in hazardous conditions or locations.
- Know the location of the closest fire alarm in the work place.
- Know where the fire exits are in the work place and keep the traffic paths free and clear of obstructions.

1.5.8. Tools/Equipment Requirements: - All personnel shall:

- Maintain equipment in a safe operating condition.
- Be certified in the use of powder-actuated impact tools if the job requires.
- Remove all scrap and trash from the work site and airport premise each day.
- Not use LAWA trash disposal containers unless given permission.
- Only use ladders that have been inspected and are clear of defects.
- Know and use ladder safety principles.

1.5.9. Vehicle Safety Requirements: - All personnel shall:

- Obey all traffic laws.
- Secure all gear and equipment in and on vehicles.
- Use red flags on items extending out of the vehicle.
- Be mindful of vehicle height and ladder racks when entering parking structures.

1.5.10. Environmental Quality Requirements: - All personnel shall:

- Take precautions to minimize dust, dirt, and noise.
- Ensure that the work area is adequately ventilated from undesirable vapors, fumes, and/or emissions.

1.5.11. Hazardous Materials Requirements: - All personnel shall:

- Label hazardous chemical containers.
- Obtain approval for the generation, storage, and transportation of hazardous wastes at and from LAWA.
- Not dump chemicals down sink drains, floor drains, or outside storm drains.
- Post a copy of all applicable Safety Data Sheet (SDS) where chemicals are used.

- Inform LAWA of any wastes or chemicals that may be generated as a result of their work prior to commencement of work.
- Take responsibility for all hazardous wastes generated at the site.
- Use only properly licensed and authorized firms to remove wastes.
- Immediately report any chemical, fluid, oil, or fuel leaks or spills.

1.5.12. Flammable Liquids/Gases Requirements: - All personnel shall:

- Store all flammable liquids and gas cylinders in properly labeled, approved, and anchored containers.
- Securely clamp or chain all compressed gas cylinders in a well-ventilated designated areas.

1.5.13. Hot-Work Permit Requirements: - All personnel shall:

- Obtain a hot-work permit for any task that produces a flame, smoke, and/or sparks.
- Provide required fire watch and applicable fire extinguishers, fire blankets, etc.

1.5.14. Electrical Work Requirements: - All personnel shall:

- Be trained and qualified before commencing electrical work at any work site.
- Use only electrical tools that are grounded or double insulated.
- Keep extension cords free from abrasions and splices.
- Use Ground Fault Circuit Interrupter (GFCI) extension cords in all potential wet, damp, or hazardous areas.

1.5.15. Excavation Requirements: - All personnel shall:

- Protect all excavations against hazardous ground movements with shoring - if required.
- Provide adequate physical protection, barriers, and/or warning lights at all excavations and trenches.

1.5.16. Confined Spaces - General Requirements: - All personnel shall:

- Comply with Utility Shutdown and Area Shutdown request procedures.
- Comply with Cal/OSHA regulations for all confined space work.

1.5.17. Confined Spaces - Hand Holes and Maintenance Holes Requirements: - All personnel shall:

- Have safety barricades around the opening when working HH's and MH's.

- Check HH's and MH's for poisonous gases using a gas sniffer that has been calibrated within the last year. LAWA reserves the right to inspect the calibration records at any time.
- Drain HH and MH water into sump trucks and properly remove it from the LAWA premise.

1.5.18. Elevated Work Requirements: - All personnel shall:

- Comply with Title 8, Subchapter 4 (Construction Safety Orders) and Subchapter 21 (Telecommunication Safety Orders) of the California Code of Regulations as applicable. http://www.dir.ca.gov/samples/search/query.htm
- Not use chairs as step-stools or ladders.
- Use guardrails or personal fall arrest systems for any work performed more than six feet off of the floor.

1.5.19. Forklift/Crane Requirements: - All personnel shall:

- Only use electric and propane forklifts inside buildings.
- Be trained operators per Cal/OSHA regulations for forklift and crane work.

1.5.20. Tower Work Requirements: - All personnel shall:

- Wear Cal/OSHA approved fall arrest harnesses, headgear, appropriate glasses, gloves and sun protection on all tower work.
- Be trained in tower climbing safety and rescue, CPR , First Aid, and RF Awareness.

1.5.21. Drug-Free Workplace

- Los Angeles World Airports (LAWA) is committed to maintaining a safe and drug-free workplace for all employees. Anyone under the influence of alcohol and/or regulated drugs is not allowed on work sites.
- Anyone who is believed to be under the influence of drugs or alcohol, while on the job, is to be escorted by their supervisor to Medical Services.
- LAWA may require drug testing on no notice. Personnel involved in a workplace accident, in a motor vehicle accident while on company business, in an accident while operating a company vehicle, or in a workplace violence incident may be required to undergo drug testing within 24 hours of the incident.
- LAWA may also require a post-accident drug and/or alcohol test of all employees near the scene following an on-the-job accident or incident.

A sample terminal renovation area where PPE and extreme caution is required.

A sample excavation area awaiting fifty new 4-inch conduits where PPE is mandatory.

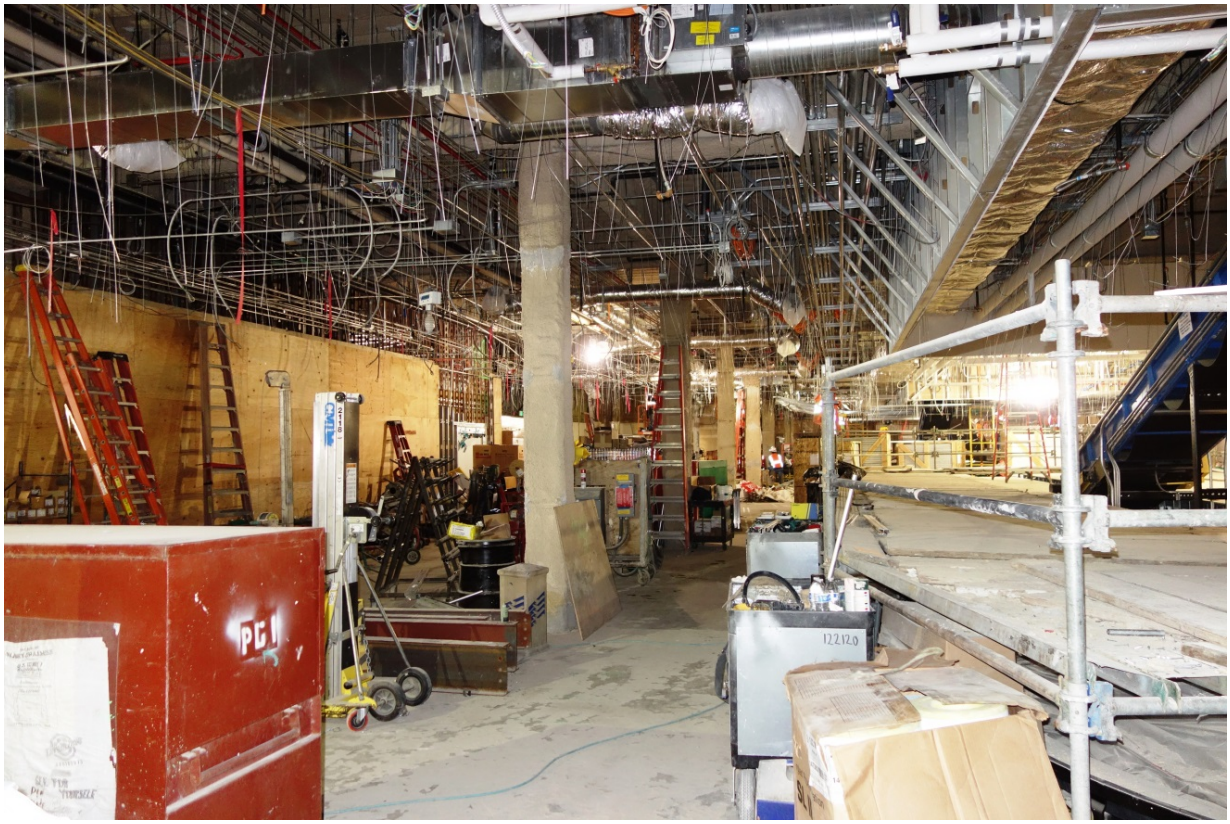

A sample terminal baggage carousel renovation area where PPE and caution is required.

A sample of a required safety barricade surrounding a Hand Hole entrance prior to splicing.

1.6. DELIVERIES

1.6.1. All deliveries of project equipment and parts shall be delivered to the LAWA IT Warehouse unless otherwise specified.

1.6.2. Deliveries from projects for inventory or overstock shall be plastic-wrapped, dated, labeled as to contents and project.

1.6.3. Warehouse staff shall be notified three days in advance of a potential deliver and receive an appointment for a delivery time.

1.6.4. Project deliveries to the IT Warehouse shall be made at no cost to LAWA.

Warehouse deliveries shall be palletized, wrapped, and labeled with date, projects, and contents.

1.6.5. Requests to deliver project equipment to LAWA's IT warehouse shall be accompanied by a receipt.

Los Angeles World Airports

Information Management & Technology Group
IT Infrastructure Division
6053 W. Century Blvd, Ste. 200
LOS ANGELES, CA 90045

Delivery Receipt

DELIVER TO:	DESTINATION:

ITEM NO.	QTY	DESCRIPTIONS	MODEL NO.	SERIAL NO.
1				
2				
3				
4				
5				
6				
7				
8				
9				
10				

Comments:

Delivered by:_____ Date:_____

Received by:_____ Date:_____

#200871

A sample LAWA Receipt for Delivery form.

1.6.6. Requests to transfer equipment and supplies shall be accompanied by an Equipment Transfer Notice form.

Los Angeles World Airports

Equipment Transfer Notice

Date: _____

Inventory Number	Description	Serial Number

The following signatures authorize the transfer of this equipment FROM the organization or entity transferring the equipment TO the organization or entity receiving the equipment.

Transferree

From: Print Name _____
(Signature)

Title:

Organization:

Receiver

To: Print Name _____
(Signature)

Title:

Organization:

A sample LAWA Equipment transfer Notice form.

1.7. TRAFFIC CONTROL

1.7.1. All surveys and work that is in or near traffic lanes or service roads shall have a traffic plan pre-approved by LAWA.

1.7.2. LAWA uses the Work Area Traffic control Handbook (WATCH) for general traffic control guidance and traffic plan preparation.

1.7.3. Traffic plans may need to be adjusted for special airport conditions..

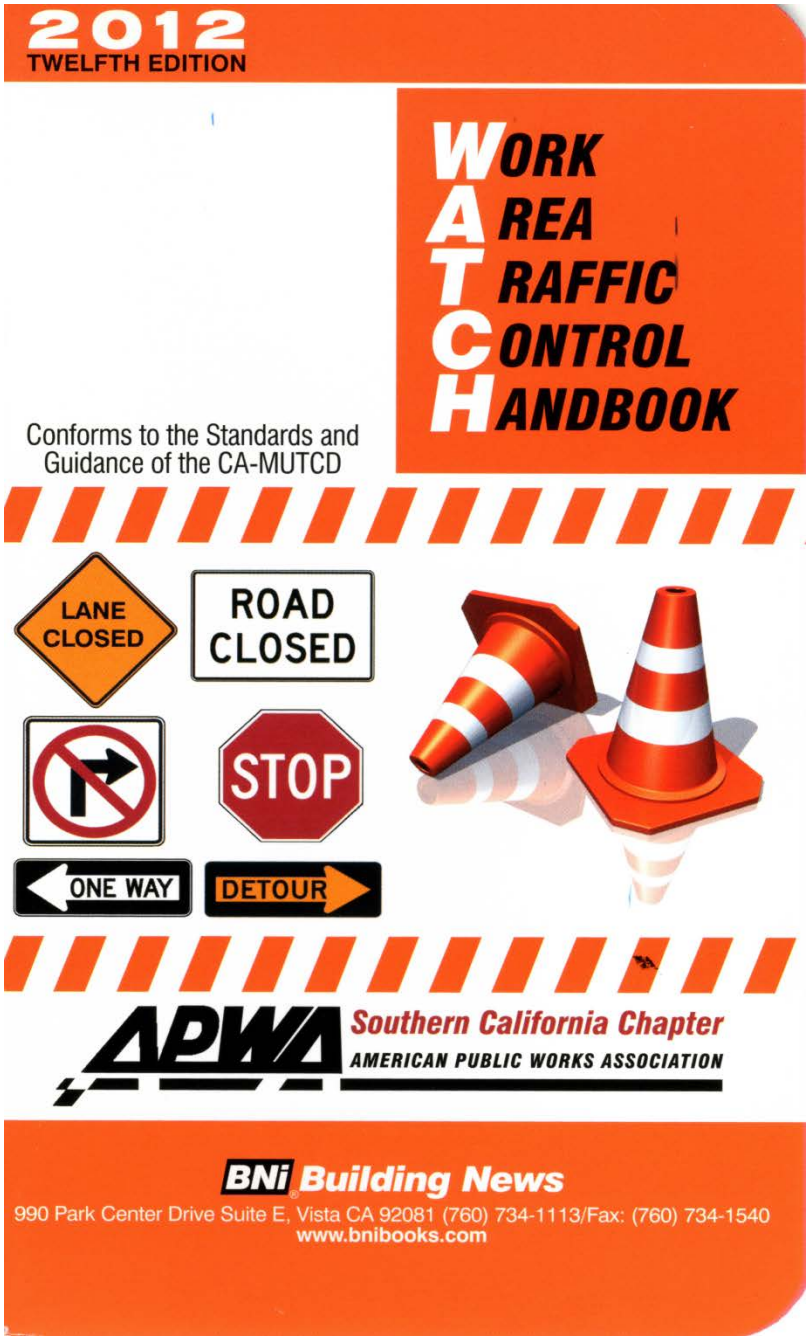

LAWA uses the WATCH manual for general traffic control.

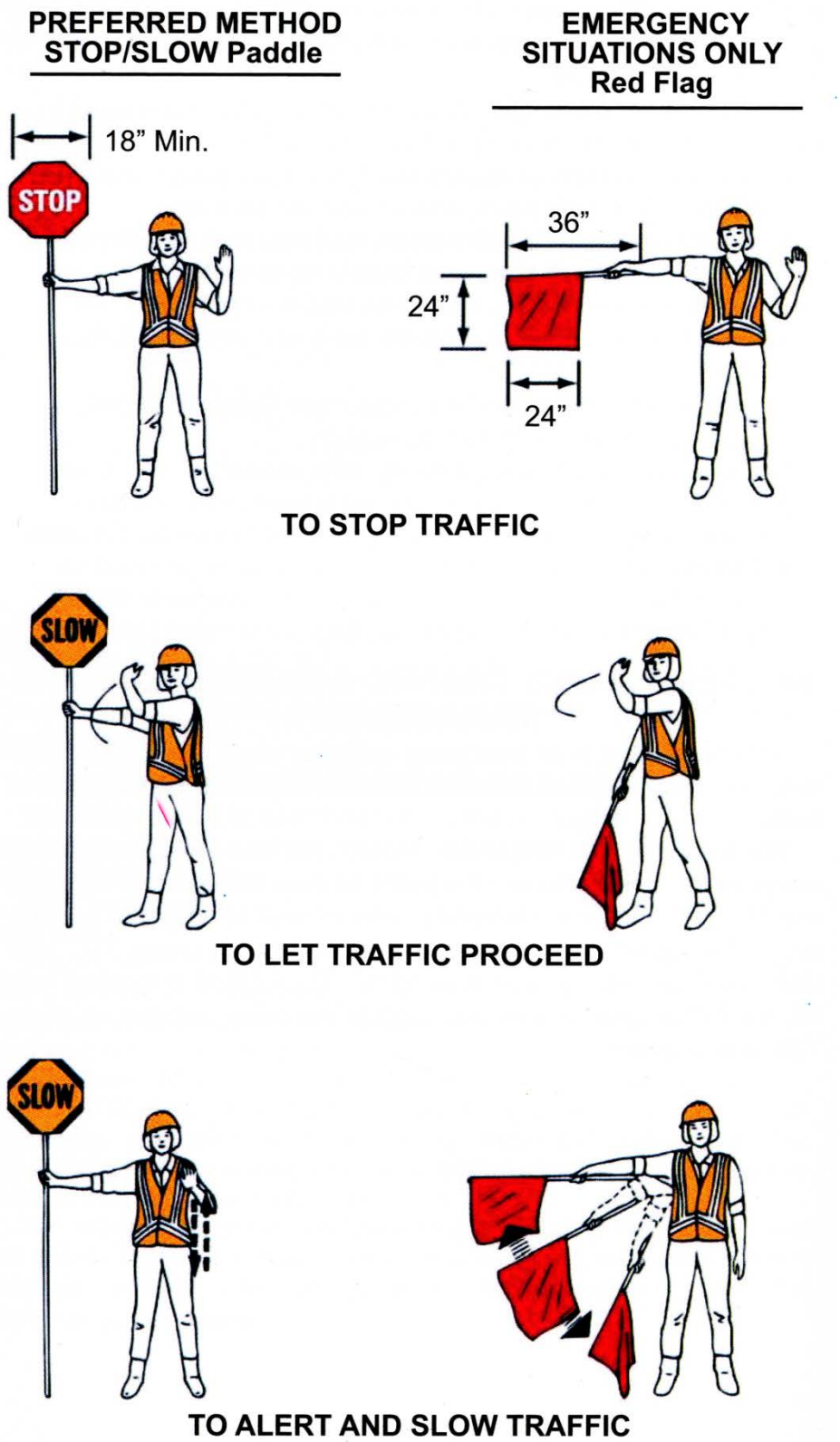

Types hand signaling devices. Courtesy: WATCH manual.

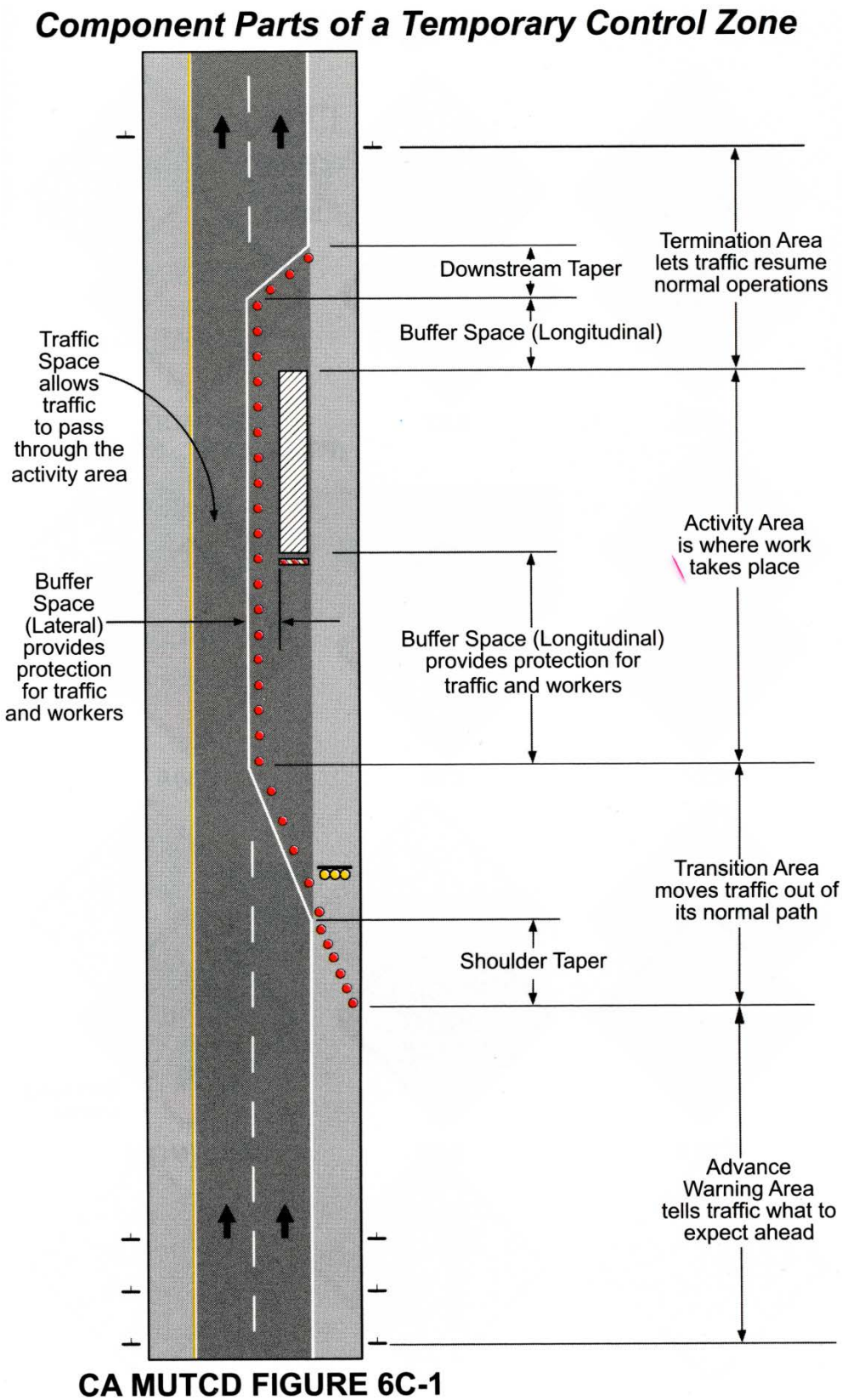

The basic component parts of a traffic control plan. Courtesy: WATCH manual.

1.8. REQUESTS > CONTRACTOR REQUESTS CONTACT INFORMATION

1.8.1. Contractors shall follow the instructions below for information on shutdowns and access requests.

LAX
Los Angeles World Airports
SHUTDOWN CONTROL CENTER
TM

The Shutdown Control Center (SCC) is an organization within the Los Angeles World Airports (LAWA) Facilities Management Group (FMG). The SCC manages all aspects of utility and area shutdowns, as well as contractor access request and key request at LAX. The SCC was instituted to centralize the numerous amounts of utility and area shutdowns due to the planned construction and maintenance projects taking place throughout LAX.

The contractor is responsible for submitting a **Utility Shutdown Request (USR)** or **Area Shutdown Request (ASR)** to the LAWA Project Manager. The contractor is responsible for reviewing, scheduling and coordinating all aspects of the shutdown, including, any contingencies that might be required, with the LAWA Project Manager. The contractor should be aware of LAWA blackout days during holiday construction restriction periods. Once submitted to the SCC, the USR or ASR is reviewed, processed and must be approved before proceeding. The SCC notifies the contractor, stakeholders and other impacted parties of all shutdowns.

- **Utility Shutdown Request**
  The utility shutdowns cover the following systems: electrical, water, natural gas, fuel, fire alarm, security/ACAMS, sewer, communications, HVAC and fire sprinklers.

- **Area Shutdown Request**
  The area shutdowns include all Landside, Airside, and Terminal areas which require any traffic closure, restriction to public access, elevator/escalator, restroom closures, and gate/taxiway closures.

The SCC also provides access for contractors to any room or roof access if needed. Key request for contractors and subcontractors can be processed with the SCC as well. The contractor will need to submit a **Contractor Access Request (CAR)** together with a letter from their company.

- **Contractor Access Request**
  The contractor access request cover all IT rooms, electrical rooms, mechanical rooms, and roof access.

- **Key Request**
  The key request can be issued for all areas at the CTA as long as it's restricted to the requester.

For information and forms contact:
Shutdown Control Center (SCC)
424-646-5977
SCC@LAWA.org
7407 World Way West
M1 Building
Los Angeles, CA 90045
Hours of Operations 6:00 am – 3:30 pm

Contractor access request information.

1.9. REQUESTS > CONTRACTOR ACCESS

1.9.1. The Contractor Access Form is required to be filled out to obtain entry into controlled spaces.

1.9.2. The form may be obtained at www.lawa.org under Tenant Projects.

Los Angeles World Airports
SHUTDOWN CONTROL CENTER

CONTRACTOR ACCESS REQUEST Application

☐ Keys ☐ Access Date

Project: LAWA CAR Tracking #

Authorized LAWA Representative:

One CAR Form is required for each room access or key request. Incomplete Forms will be returned.

ACCESS REQUEST TYPE ☐ Electrical Room ☐ Mechanical Room ☐ Roof Access ☐ Other

APPLICANT INFORMATION

Name LAWA ID #
Phone E-mail Driver's License
Company Position/Title Last 4 Digits of SSN

SUPERVISOR/TENANT/CONTRACTOR INFORMATION

Supervisor Name Phone E-mail
Organization Signature Date
General Contractor Name Phone E-mail
Signature Date

REASON FOR REQUEST

Work to be performed:

Access Start Date			Access End Date		
Day:	Date:	Time:	Day:	Date:	Time:

Building/Room Where Access is Needed
Specify Location To Meet LAWA Personnel

Comments:

FOR SHUTDOWN CONTROL CENTER USE ONLY

FTSD (initial) Signature Date

☐ BADGE APPROVED ☐ ESCORT REQUIRED ☐ ACCESS DENIED

☐ Key Issued ☐ No Key Issued Key # Key Return Date:

In Case of Emergency call 310-646-7911 at LAX

Room Access

1. Contractor must submit a CAR Form for each room.
2. All contractors requesting access must have an active LAX Badge.
3. Email the Form to the **Shutdown Control Center (SCC)** at SCC@LAWA.org.
4. The Form must be received a minimum of 3 business days in advance. (See Note below)
5. SCC does not provide ACAMS or IT Room Access.
6. LAWA personnel will wait no more than 15 minutes at meeting location for contractor.

Key Request

1. Each contractor is required to submit a CAR Form for **each individual** they are requesting keys for, along with a letter from the Contractor/Sub Contractor.
2. All contractors requesting keys must have an active LAX Badge and will be required to sign for the key(s) issued.
3. Email the CAR Form along with the letter(s) from Contractor and/or Sub-Contractor to the **Shutdown Control Center (SCC)** at SCC@LAWA.org.
4. The review and approval process for the key request can take up to 30 days.
5. SCC does not provide ACAMS or IT Room Access.
6. All contractors are required to return the key(s) upon completion of work or termination of employment to the SCC.

NOTE: Request received on Saturday and Sunday or after 1:00 p.m. (1300) Monday through Friday will be marked as "RECEIVED" on the following business day.

LAWA CAR Rev 2.1

Contractor access requests must be applied using this partially shown form.

1.10. REQUESTS > AREA SHUTDOWN

1.10.1. For approval of any work area that can disrupt normal operations, the Area Shutdown Request form shall be completed and submitted.

1.10.2. The form may be obtained at www.lawa.org under Tenant Projects.

Los Angeles World Airports
SHUTDOWN CONTROL CENTER

AREA SHUTDOWN REQUEST
Application

LAX Project No. _____ Contractor Tracking # _____ - _____ LAWA Tracking # _____ - _____

Construction Project: _____ LAWA Project Manager: _____

In Case of Emergency call 310-646-7911 at LAX

1. A separate form is required for each area to be shutdown. **NOTE:** A USR may be required to coincide with the ASR.
2. Request must be received 30 days prior to the area shutdown time. NO EXCEPTIONS.
3. Please complete the form in its entirety and attach any backup documentation. **INCOMPLETE FORMS WILL BE RETURNED**.
4. Submit the completed form to the **Shutdown Control Center (SCC)** at SCC@LAWA.org.
5. The Contractor is **RESPONSIBLE FOR CONTACTING** the **ARCC (Airport Response Coordination Center),** 30 minutes prior and upon completion. **(ARCC) 424-646-LAWA (5292), at prompt enter #4-shutdown, #1-shutdown**.
   NOTE: Unexpected work that may delay restore time shall be reported immediately to the ARCC.
6. Shutdown times may change without notice due to airport operational priorities.
7. Requests received on Saturday and Sunday or after 1:00 p.m. Monday through Friday will be marked as "RECEIVED" on the following business day.

SHUTDOWN TIMES MAY CHANGE WITHOUT NOTICE DUE TO AIRPORT OPERATIONAL PRIORITES

(Select all affected areas per task)

☐ Traffic Flow ☐ Elevator ☐ Parking Structure ☐ AOA ☐ Crane Pick
☐ Sidewalk ☐ Escalator ☐ Customer Flow ☐ CUP ☐ Other _____

Operational Zone:
☐ A (T1 - T3) ☐ B (TBIT) ☐ C (T4 - T8) ☐ D (Roadway & Parking Structure) ☐ E (AOA)

Affected Buildings/Systems: _____

Purpose: _____

Airfield: _____ Terminal: _____ Floor/Level: _____ Landside: _____
(Roadways and Parking Structures)

FIELD CONTACT INFORMATION:

Contractor: _____ Contact Name: _____

Phone: _____ Email: _____

SHUTDOWN INFORMATION: Day: _____ Date: _____ Time: _____

RESTORE INFORMATION: Day: _____ Date: _____ Time: _____

Comments: _____

General Contractor: _____ Contractor Requestor's Name: _____

Phone: _____ Email: _____ Date Submitted: _____

DO NOT WRITE BELOW THIS LINE, FOR SHUTDOWN CONTROL CENTER USE ONLY

Date Received: _____ ☐ APPROVED

Comments: _____

_____ Shutdown Control Center Manager _____ Date

LAWA ASR Rev 2.1 - *Page 1 of 5*

Area shutdown requests shall be submitted using this form or the more current version.

1.11. REQUESTS > UTILITY SHUTDOWN

1.11.1. For approval of any work area that can disrupt utilities, the Utility Shutdown Request form shall be completed and submitted.

1.11.2. The form may be obtained at www.lawa.org under Tenant Projects.

Los Angeles World Airports
SHUTDOWN CONTROL CENTER

UTILITY SHUTDOWN REQUEST
Application

LAX Project No. _____ Contractor Tracking # _____ - _____ LAWA Tracking # _____ - _____

Construction Project: _____ LAWA Project Manager: _____

In Case of Emergency call 310-646-7911 at LAX

1. A separate form is required for each utility to be shutdown. **NOTE:** An ASR may be required to coincide with the USR.
2. Request must be received 30 days prior to the utility shutdown time - NO EXCEPTIONS.
3. Please complete the form in its entirety and attach any backup documentation. **INCOMPLETE FORMS WILL BE RETURNED.**
4. Utilities will be shutdown and restored by LAWA personnel **ONLY.**
5. The shutdown and restore will NOT occur unless the Contractor is present at the "Specific Location" noted on the form.
6. Submit the completed form to the **Shutdown Control Center (SCC)** at SCC@LAWA.org.
7. The Contractor is responsible for contacting the **ARCC (Airport Response Coordination Center),** 30 minutes prior and upon completion. **(ARCC) 424-646-LAWA (5292), at prompt enter #4-shutdown, #1-shutdown.**
   NOTE: Unexpected work that may delay restore time shall be reported immediately to the ARCC.
8. LAWA personnel will wait no more than 15 minutes at the meeting location for contractor.
9. Shutdown times may change without notice due to airport operational priorities.
10. Requests received on Saturday and Sunday or after 1:00pm (1300) Monday through Friday will be marked as "RECEIVED" on the following business day.

Type of Utility: _____ Description of Place to Meet: _____

Specific Location: _____

Affected Buildings/Systems: _____

Purpose: _____

Airfield: _____ Terminal: _____ Floor/Level: _____ Landside: _____
(Roadways and Parking Structures)

FIELD CONTACT INFORMATION:

Field Contractor: _____ Field Contact Name: _____

Phone: _____ Email: _____

SHUTDOWN INFORMATION: **RESTORE INFORMATION:** Restore Only No Restore

Day: _____ Date: _____ Time: _____ Day: _____ Date: _____ Time: _____

Comments: _____

General Contractor: _____ Contractor Requestor's Name: _____

Phone: _____ Email: _____ Date Submitted: _____

DO NOT WRITE BELOW THIS LINE, FOR SHUTDOWN CONTROL CENTER USE ONLY

Date Received: _____ FTSD/LAWA Shop Required APPROVED

Comments: _____

SCC Select: _____ _____ _____
Shutdown Control Center Manager Date

LAWA USR Rev 7.0 - *Page 1 of 2*

Utility shutdown requests shall be submitted using this form or the more current version.

1.12. REQUESTS > LOCATING SUB-SURFACE UTILITIES

1.12.1. Subsurface utilities shall be located by calling the California Underground Service Alert South at (800) 227-2600, or One Call Referral Systems International at (888) 258-0808. Or, www.digalert.com

1.12.2. The LAWA IT Service Desk can also be called at 424-646-9000 48-hours in advance for assistance in identifying LAWA's HH's and MH's.

1.12.3. Orange is the uniform color code for utility flagging, painting, and identifying communications, alarms, signals, and CATV.

Dig Alert web site home page.

1.13. REQUESTS > TENANT CONSTRUCTION APPROVAL

1.13.1. Before the construction or installation of any indoor or outdoor IT facilities, construction approvals shall be obtained through the Tenant Improvement Approval Process (TIAP).

1.13.2. For more information on tenant projects, refer to the Tenant Project Approval Process Manual or call LAWA's Facilities Planning Division at (424) 646-7690. Direct all correspondence to: http://www.lawa.org/welcome_LAWA.aspx?id=4162

1.13.3. Direct IT Infrastructure correspondence to: LAWA Information Management & Technology Group

- Attention: Office of Infrastructure Technology
- 6053 W. Century Blvd., Suite 200
- Los Angeles, California 90045
- 424-646-9000

Los Angeles World Airports

Stage I - Concept Review

Instructions: Concept Request

The Concept Request Form is to be completed by the Applicant / Tenant and mailed to ProjectApprovals@lawa.org in order to initiate a Concept Review. **If assistance is needed completing the form or providing supporting documents, please contact your designated Business Relations Manager (BRM) in the Commercial Development Group (CDG).** In order to ensure timely processing, please ensure that all fields are completed and the required documents are attached.

Concept Request Form, Page 1:

Project Name: Enter a concise name for the project including the Tenant's name, project location, and project scope. For example: ABC Airlines - LAX Terminal 1 - Office Relocation
Tenant Lease/Agreement Number: Enter the number associated with your lease or agreement with LAWA.
Project Address: Enter the address of the structure where the project will take place.
Project Location: Check the appropriate box to indicate the airport location.
Is This Request for a: Please indicate if the Concept Request is for a Project, Program, and/or Phased Construction.
Tenant Contact Information: This field should indicate the Authorized Agent from the Tenant Company, to be copied on all correspondence related to this project.
Designated Representative Contact Information: This field should indicate a Project Representative, if different from the Tenant Contact above, to be copied on all correspondence related to this project.
Project Element: Check all boxes that apply to the project. If other, please specify/explain.
Estimated Milestones: **These estimates will be used to coordinate other construction and operations at the airport. Thus, any deviation from these estimates may be subject to further review and/or coordination. Note that each review stage will take 2-3 weeks, and all tenant projects require a minimum of 2 review stages (Concept Review & 100% Review).**
Estimated Construction Cost: Include all estimated costs associated with project construction.
LADBS Information: **Note that as of November, 2012, all building projects at LAWA with an LADBS permit-valuation over $200,000 shall achieve LAGBC Tier-1 conformance.**

Construction approval requests shall be submitted using this form or the more current version.

1.14. REQUESTS > TENANT REQUEST TO INSTALL ANTENNAS

1.14.1. Requests to install antennas shall be submitted for LAWA's approval using the form below.

1.14.2. LAWA will review and either approve, modify, or deny the request.

Los Angeles World Airports **ANTENNA INSTALLATION APPLICATION**	**For LAWA use only** Application No.:_____ Date Received: _____

I. Applicant Information:

Company Name:			
Mailing Address:	(Number and Street)		(Suite Number)
	(City)	(State)	(Zip Code)
Contact Name:			
Contact Tel:		**E-mail Address:**	

II. Service Provider:

Company Name:			
Mailing Address:	(Number and Street)		(Suite Number)
	(City)	(State)	(Zip Code)
Contact Name:			
Contact Tel:		**E-mail Address:**	

III. Project Description: (Please attach separate sheet entitled "Project Description" if additional space is necessary)

Intended Use:	
Location:	☐ Los Angeles International Airport Terminal #:_____ Sector #: _____ Item #:_____ ☐ Palmdale Airport ☐ Ontario International Airport Terminal #:_____ Sector #: _____ Item #:_____ ☐ Van Nuys Airport

IV. System Description:

FCC License No.:			
Frequency:		**Radiation Pattern:**	
Antenna Make:		**Antenna Model:**	
Output Power:		**Power Requirement:**	

V. Required Attachments:

1. Copy of FCC license
2. Antenna Plan
3. Interference Study
4. Site Plan
5. Cable Plan
6. Specification sheet for equipment

_____	_____	_____	_____
Print Name	Signature	Title	Date

A sample LAWA antenna installation Request form.

1.15. REQUESTS > TENANT CONSTRUCTION INSPECTION

1.15.1. All tenant work shall be inspected unless LAWA deems otherwise.

1.15.2. Requests for LAWA inspection of Tenant project can be obtained by filling out the following form.

Submit | Print

Los Angeles World Airports

LAWA INSPECTION TRACKING # _____

TENANT INSPECTION REQUEST FORM

NOTES TO TENANTS AND CONTRACTORS

1. LAWA inspection is required before covering or concealing any electrical, plumbing, utility, mechanical, fire sprinkler, fire alarm, or structural systems.
2. LAWA inspection is required prior to or concurrently with all Building and Safety inspections
3. LAWA Inspection is required for a pre-demolition conference
4. Attach a copy of the plan and designate area to be inspected
5. Inspection Request must be received 24 hours prior to inspection the date
6. The request is to be sent to: tenantinspection@lawa.org or fax 424 646-9343.
7. For questions regarding LAWA Tenant Inspection, call 424 646-6010 between the hours of 6:00am and 2:30pm.

Project name:		LAWA T-LAX #:
Prime Contractor:	Subcontractor:	Date & time inspection requested:
Field contact name:	Field contact number:	Address or Terminal:
Area:	Room #:	Check all that apply: wall ☐ floor ☐ ceiling ☐ other ☐
Inspection type (check all that apply): General ☐ Electrical ☐ Mechanical ☐ Plumbing ☐ Other ☐		

Description of requested inspection:

LAWA INSPECTOR NOTED DEVIATIONS:

DEVIATIONS: Yes ☐ No ☐ N/A ☐	**REINSPECTION REQUIRED PRIOR TO PROCEEDING WITH WORK: Yes ☐ No ☐ N/A ☐**
Project Manager or Project Superintendent Approval Verified work complies with LAWA approved project documents Name: _____ Signature: _____ Date of request: _____ Contact number: _____	LAWA Inspector: Name and Date: _____ Contact number: _____

TENANT INSPECTION 7.20.12

Tenant inspection requests shall be submitted using this form or the more current version.

1.16. REQUESTS > CADD AND CADD STANDARDS

1.16.1. All preliminary and final design versions shall be submitted in LAWA's-required CADD format in addition to any hard copy or PDF requirements.

1.16.2. CADD Standards may be obtained from LAWA.org.

LAWA's CADD Standard manual is shown.

1.17. REQUESTS > SPACE IN IT ROOMS

1.17.1. Requests to use space within LAWA IT Rooms shall be submitted for LAWA's approval using the following form. In general, tenants are not allowed to use LAWA TR rooms with the exception of the MPOE, to bring in telecommunications circuits.

1.17.2. LAWA IMTG will review and either approve, modify, or deny the request.

City of Los Angeles - Los Angeles World Airports
TELECOMMUNICATIONS ROOM SPACE APPLICATION
Information Management & Technology Group

I. Applicant Information:

Tenant/Division Name: Contact Name:
Contact Tel : ( ) E-mail address:
Contact Signature: Date :

II. Contractor Information:

Company Name: Contact Name:
Contact Tel : ( ) E-mail address:

III. Requested Space:

Campus: ☐ LAX Airport ☐ Ontario Airport ☐ Palmdale Airport ☐ Van Nuys Airport

Building Location: *Floor/Level* *Room No.* OR *ACAMS Door No.*

☐ Wall Space Wall Dimension (L x W x D):
☐ Floor Space Floor Dimension (L x W x H):
☐ Equipment Cabinet/Rack Space Cabinet/Rack No:

IV. Equipment Information:

Qty	Type	Rack Unit	Power Requirement	Heat Dissipation	Require Dedicated Circuit?
			VAC Amps	BTU	☐ Yes ☐ No
			VAC Amps	BTU	☐ Yes ☐ No
			VAC Amps	BTU	☐ Yes ☐ No

NOTE: 1. Attach communications plan which includes:

a) Equipment Room Layout *c) Rack, Cabinet, or Wall-mount Detail*
b) Cable and Conduit Plan *d) Equipment Specifications*

V. Purpose:

Estimated Completion Date:

FOR IT-INFRASTRUCTURE USE ONLY

☐ **Space Available** ☐ ***Space Not Available***

Remarks:

Approved By: Date:
Name / Signature

Application No:
Date Received:
Assigned To:

Electrical Room No:
Floor/Level:
Electrical Panel:
Circuit Breaker #:

CLEAR FORM PRINT FORM Created: August 17, 2010

A sample LAWA IT Room Space Request form.

1.18. REQUESTS > FIBER CIRCUITS

1.18.1. Requests for fiber circuit creation shall be submitted for LAWA's approval using the following form.

1.18.2. LAWA IMTG will review and either approve, modify, or deny the request.

Information Management & Technology Group
Infrastructure & Facilities Management Section
ITServiceDesk : (424) 646-9000
Email: ITServicedesk@lawa.org

FIBER CIRCUIT REQUEST FORM

STOP

PLEASE READ THIS!!!

1. For Non-LAWA : (a) Submit a formal letter to Nathan Look at nlook@lawa.org and obtain an approval.
(b) If approved, LAWA does not currently charge for the use of fiber infrastructure, but have the right to do so in later year/s. ☐ I agree *Initials*_____

2. *Allow at least 4 weeks for fiber circuit completion.
3. Open an ITSR Work Order through ITServicedesk

☐ LAWA ☐ Non-LAWA

Full Name: Phone No: Email address:
Division/Tenant/Airline/Agency: Date Requested: Due Date:*

Project Title: Project Number:
IT Systems** *(that will be supported by the circuit):*
Special instruction , description or other information:

FIBER CIRCUIT #1

No. of Fibers Needed: ☐ Single ☐ Pair ☐ Others, *please specify* **Type of Fiber:** ☐ Single-Mode ☐ Multi-Mode

End Device Location (FROM):
Building Name/Address:
Floor / Level: Rm No:
Equipment Description:
☐ Wall mount ☐ Rack mount Rack #:
Equipment Connector Type:
☐ LC ☐ SC ☐ SCA ☐ Others *please specify*
NOTE:

End Device Location (TO):
Building Name/Address:
Floor / Level: Rm No:
Equipment Description:
☐ Wall mount ☐ Rack mount Rack #:
Equipment Connector Type:
☐ LC ☐ SC ☐ SCA ☐ Others *please specify*
NOTE:

FIBER CIRCUIT #2

No. of Fibers Needed: ☐ Single ☐ Pair ☐ Others, *please specify* **Type of Fiber:** ☐ Single-Mode ☐ Multi-Mode

End Device Location (FROM):
Building Name/Address:
Floor / Level: Rm No:
Equipment Description:
☐ Wall mount ☐ Rack mount Rack #:
Equipment Connector Type:
☐ LC ☐ SC ☐ SCA ☐ Others *please specify*
NOTE:

End Device Location (TO):
Building Name/Address:
Floor / Level: Rm No:
Equipment Description:
☐ Wall mount ☐ Rack mount Rack #:
Equipment Connector Type:
☐ LC ☐ SC ☐ SCA ☐ Others *please specify*
NOTE:

Clear Form Print Form Revised:9/11/2015-abc

A sample LAWA Fiber Circuit Request form.

1.19. REQUESTS > LAWA INTERNAL DRAFTING SERVICES

1.19.1. Requests for LAWA-internal Drafting Support services shall be submitted for LAWA's approval using the following form.

1.19.2. LAWA IMTG will review and either approve, modify, or deny the request.

Information Management & Technology Group
Infrastructure & Facilities Management Section

Drafting Support Request Form

Requested By: **Date:**

Division/Section or Agency: **Due Date:**

Phone Number: **Ext:** **Email Address:**

Project/Drawing Title:

Reason For Request:

Special instruction (if any):

Type of Work: ***Check all that apply***

☐ **Print/Plot** ☐ **Electronic Copy** ☐ *.dwg* ☐ **Others**
☐ **Scan Drawing(s)** ☐ *.pdf* ***please specify:***

Printing Instruction

Paper Size:

☐ **A - 8.5 X 11** ☐ **C - 17 X 22** ☐ **E - 34 X 44** ☐ **Black & White**
☐ **B - 11 X 17** ☐ **D - 22 X 34** ☐ **Others** *please specify:* ☐ **Color**

No. of sheet: ***No. of copy:*** each ***Total no. of sheet:***

For IT-IFMS Use Only

1. Highly Restricted-SSI? ***if "Yes", please have the requestor read this warning and notice.***

☐ **Yes** ☐ **No**

WARNING: The record contains Sensitive Security Information that is controlled under 49 CFR parts 15 and 1520. No part of this record may be disclosed to persons without a "need to know", as defined in 49 CFR parts 15 and 1520, except with the written permission of the Administrator of the Transportation Security Administration or the Secretary of Transportation. Unauthorized release may result in civil penalty or other action. For U.S. government agensices, public disclosure is governed by 5 U.S.C. 552 and 49 CFR parts 15 and 1520.

NOTICE: The information contained in this transmittal is intended only for the personal and confidential use of the designated recipient(s). This transmittal may contain information which privileged, confidential, and excempt from disclosure under applicable law. If the reader of this message is not the intended recipient, employee or agent for delivering this transmittal to the intended recipient(s), you are hereby notified that any review, dissemination, distribution or copying of any information contained in this transmittal is strictly prohibited. If you have received this transmittal of information in error, please notify ITServiceDesk immediately by telephone at (424) 646-9000 and return the original transmittal to Los Angeles World Airports, Information Management & Technology Group, 6053 W. Centruy Blvd. Suite 200, Los Angeles, CA 90045.

2. Non-LAWA personnel?
☐ **Yes** ☐ **No**

3. *Non-Disclosure Agreement required?
☐ **Yes** ☐ **No**

Approved by: ***Date Approved:*** ***Request Number: 101-18-***

Assigned to: ***Date Assigned:*** ***Date Completed:***

Clear Form Print Form Revised: 1/11/2012

A sample LAWA Computer Aided Drawing and Design Request form.

1.20. PERMITS

1.20.1. All work shall be permitted as required Los Angeles Department of Building & Safety.

E PC

CITY LA DBS DEPARTMENT OF BUILDING AND SAFETY

APPLICATION FOR
ELECTRICAL PLAN CHECK

(Use **E** Application for **Electrical Permit**)

PROJECT ADDRESS	City	Zip Code	Unit No.
Cross Street:			

WORK DESCRIPTION

Briefly describe the **scope of work**:	**Check one:** ☐ House/Duplex ☐ Commercial ☐ Equipment ☐ Hotel or Motel ☐ Industrial ☐ Other ☐ Apartment, Condo or Town Home

Applicant's Name	Number & Street Name	City & Zip Code	Phone Number	Email

Property Owner's Name	Number & Street Name	City & Zip Code	Phone Number

Contractor's Name	Number & Street Name	City & Zip Code	Phone Number
City of Los Angeles Business Tax Registration Certification		State License #	Class
Workers Compensation Carrier		Policy #	Expiration Date

Engineer's/Architect's Name	Number & Street Name	City & Zip Code	Phone Number
State License #		Expiration Date:	

APPLICATION PROCESSING INFORMATION

OK for Cashier: Date:_____

Permit Fee - Subtotal	
Permit Issuing Fee	
Permit Supp. Issuing Fee	
Permit Investigation Fee	
Plan Check Fee - Subtotal	
Additional Plan Check Hours	
Off - Hour Plan Check	

For Cashiers Use Only

Customer Name:_____ Q-Matic#:_____
PCIS# _____ - _____ - _____

PC/ELEC/APP.03 (Rev. 10/2014) Page 1 of 2 www.ladbs.org

Sample electrical permit application page 1 of 2.

(Use **E** Application for **Electrical Permit**)

List of Equipment - Please enter the number of items in each box below as applicable.

New Branch Circuits

15 or 20 A, 120 V Gen. Use Rec. Or Lighting, Dwelling & Non-Dwelling Appliances or motors less than or equal to 3 HP or KVA	15-20 Amp 208V to 277V Lighting	All Other Lighting 600V or Less	Three-Phase Lighting

Existing Branch Circuits or Temporary Wiring

Permanent Yard Lighting	Lamp holder for Temporary Lighting	Number of Units	Utilization Equipment # 3 HP-KVA

Motors, Transformers, Heating Appliances and Miscellaneous Equipment or Appliances (HP, KW or KVA)

3.1 thru 5	5.1 thru 20	20.1 thru 50	50.1 thru 100	Over 100

Busway, Cable Bus and Bus Equipment

0 to 99 Amp (Ft)	100 to 400 A (Ft)	Over 400 A (Ft)	Cable Tray (Ft)

Services

0 - 200A	201 - 400A	401 - 600A	601 - 1200A	Over 1200A	Over 600V

Panelboards and Switchboard Sections

0 - 200A	201 - 600A	401- 600A	601 - 1200A	Over 1200A	Over 600V

Unfiltered/Filtered Signs

Sign or Gas Tube System 1 Branch Circuit	Additional Circuit for Sign or Gas Tube System	Added Sign or Gas Tube System to 1 Circuit	Number of Flashers, Time Clocks or Controls

Photovoltaic Solar System

Modules (AC or DC)	Solar Voltaic Roofing Material per Roll – Square Ft.	Solar Voltaic Roofing Tiles – Square Ft.	Combiner Box	Inverter (KVA or KW)					
				0 – 3.0	3.1 – 5	5.1 – 20	20.1 – 50	50.1 – 100	Over 100

Fire Alarm, Communication and Control

Communication Devices	Communication Panels	Control Devices	Control Panels	Fire Alarm Devices	Fire Alarm Panels	Guest Rooms Smoke Detectors	S.F.D. & Apt Smoke Detectors

Miscellaneous **Others** **Energy**

Change of Address	Extra Trip	Swimming Pools	Transfer of Permit		Indoor Area – Square Ft.	Outdoor Area – Square Ft.

PC/ELEC/APP.03 (Rev. 6/2006) Page 2 of 2 www.ladbs.org

Sample electrical permit application page 2 of 2.

H

CITY LA DBS
DEPARTMENT OF BUILDING AND SAFETY

APPLICATION FOR HVAC PERMIT OR HVAC PLAN CHECK

FOR OFFICE USE ONLY	
Customer Name:_____	Q-Matic #:_____
PCIS #: -	-

PROJECT ADDRESS	City	Zip	Unit No.
Cross Street:			

WORK DESCRIPTION

Briefly describe the scope of work:	Check one: ☐ House/Duplex ☐ Apt, Condo, Townhouse ☐ 3 stories or less ☐ more than 3 stories ☐ Commerical, Hotel, Motel

Applicant's Name	Number & Street Name	City & Zip Code	Phone Number	Email

Property Owner's Name	Number & Street Name	City & Zip Code	Phone Number

Contractor's Name	Number & Street Name	City & Zip Code	Phone Number
City of Los Angeles Business Tax Registration Certification		State License #	Class
Worker's Compensation Carrier		Policy #	Expiration Date

Engineer's/Architect's Name	Number & Street Name	City & Zip Code	Phone Number
State License #		Expiration Date:	

APPLICATION PROCESSING INFORMATION

OK for Cashier: Date:

For Cashier's Use Only

Permit Fee - Subtotal	
Permit Issuing Fee	
Permit Supp. Issuing Fee	
Permit Investigation Fee	
Plan Check Fee - Subtotal	
Additional Plan Check Hours	
Off - Hour Plan Check	

PC/MECH/App.04 (Rev. 10/20/14) www.ladbs.org

Page 1 of 2

Sample HVAC permit application page 1 of 2.

List of Equipment

Please enter the number of items in each box below. Leave blank if not applicable.

Compressor

AC <= 25 HP	AC 26-49 HP	AC >= 50 HP	Refrig. <= 25 HP	Refrig. 26-49 HP	Refrig. >= 50 HP

Witnessing Tests

Heating/Cooling Equipment	Smoke Control	Ventilating System

Environmental Vent System

Bathroom	Conference Room	Corridor	Dryer	Electrical Room	Elevator Machinery Rm

Environmental Vent System	Kitechen Residential	Laundry Room	Storage Room	Telephone Equipment Room

Fire Protection Devices

Area Type Smoke Detect	Comb. Smoke/Fire Damper	Duct Type Smk Detector	Fire Damper	Smoke Damper

Hoods

Fume	Type I-Hood	Type II - Hood

Heating Appliance

Appliance Vent-Listed	Fireplace-Gas	Fireplace-Solid Fuel	Gas Furnace-MB tu/h	Gas Heater-MB tu/h	Metal Chimney Unlisted

Kitchen Commercial Vent System

Type I Grease Duct	Type II Duct

Prod Conveying Vent System

Class H Occ. Room	Garage	Halon Exhaust	Refrigeration Machinery Rm	Smoke Ctrl System

Smoke Evacuation	Stairwell Pres. Sys.	Transformer Vault	Prod. Conv. Vent System Misc.

System Components

Air Handling Unit	Air Inlet/Outlet	Conditioned Floor Area (1)	Evaporative Cooler	Incidental Gas Piping Outlet

Miscellaneous

Change of Address	Extra Trip	Misc. Permit	Transfer of Permit (2)	Add/Alter/ Repair

Plan Check Items

Cooking Hood Type I	Cooking Hood Type II	Fume Hood	Vent System for Type I Hood	Vent System for Type II Hood	Product Conveying Vent System	Smoke Control System	Stair Pressurization System	Duct Joints

NOTE: *(1) Use this box only when there are no air inlets/outlets. (2) For change of contractor, check the "Transfer of Permit" box.*
(3) Any entry in these boxes may require plan check.

PC/MECH/App.04 (Rev. 10/20/14) Page 2 of 2 www.ladbs.org

Sample HVAC permit application page 2 of 2.

F

CITY LADBS
DEPARTMENT OF BUILDING AND SAFETY

APPLICATION FOR FIRE SPRINKLER PERMIT OR PLAN CHECK

FOR OFFICE USE ONLY	
Customer Name:_____	Q-Matic #:_____
PCIS #: -	-

PROJECT ADDRESS	City	Zip	Unit No.
Cross Street:			

WORK DESCRIPTION

Briefly describe the scope of work:	Check one: • • House/Duplex • • Apartment, Condo, Commercial, Hotel, Motel	Check one: • • Low rise • • High rise

Applicant's Name	Number & Street Name	City & Zip Code	Phone Number	e-Mail

Property Owner's Name	Number & Street Name	City & Zip Code	Phone Number

Contractor's Name	Number & Street Name	City & Zip Code	Phone Number
City of Los Angeles Business Tax Registration Certification		State License #	Class
Worker's Compensation Carrier		Policy #	Expiration Date

Engineer's/Architect's Name	Number & Street Name	City & Zip Code	Phone Number
State License #		Expiration Date:	

APPLICATION PROCESSING INFORMATION

OK for Cashier: Date:

Permit Fee - Subtotal	
Permit Issuing Fee	
Permit Supp. Issuing Fee	
Permit Investigation Fee	
Plan Check Fee - Subtotal	
Additional Plan Check Hours	
Off - Hour Plan Check	

For Cashier's Use Only

PC/MECH/App.03 (rev. 10/20/2014) Page 1 of 2 www.ladbs.org

Sample fire sprinkler permit application page 1 of 2.

List of Equipment

Please enter the number of items in each box below. Leave blank if not applicable.

System and Devices

Add/Replace Valves/Dev.	Backflow Device • •2	Backflow Device > 2	Cap Standpipe
Fire Pump (II/H) - Install	Fire Pump (III/Fire Sprnklr)	Hydrant	Lower Fire Sprnklr Head
New Sprnklr Head (1)	Replace Sprnklr Head (2)	Standpipe (I) Flush, Risers	Standpipe Outlets (I,II,III,H)
Standpipe Outlet W/Regulator	Storage Tank	Underground Piping	Water Pres. Regulator

Miscellaneous

Change of Address	Extra Trip	Misc. Permit	Transfer of Permit (3)
Fire Pump (II/H) - Orig Test	Fire Pump (II/H) - Add'l Test	F. Pump (III/F. Sprnk) Fire Orig Test	F. Pump (III/F. Sprnk) Fire Add'l Test

Plan Check Items

Hydraulic Calcs Fire Pump Hi-Rise	Hydraulic Calcs Standpipe System 2 1/2"

NOTES:

(1) Relocation of Sprinkler heads does not require plan check..

(2) Replace with identical sprinklers, otherwise plan check is required.

(3) For change of contractor, check the "Transfer of Permit" box.

(4) Any entry in these boxes requires plan check, except as noted above

PC/MECH/App.03 (rev. 10/20/2014) Page 2 of 2 www.ladbs.org

Sample fire sprinkler permit application page 2 of 2.

FIRE LIFE SAFETY PRE-TEST SHEET

JOB ADDRESS

INSPECTION RECORDS AND PLANS MUST BE AVAILABLE WHEN REQUESTED

NOTE: 1. All items below that pertain to the area(s) being tested shall be checked, verified, initialed and dated by the installer responsible for the installation. All other items shall have N/A placed in it's applicable box.
2. The Building Inspector for the project must be called and perform their Final Building Inspection prior to scheduling the Fire Life Safety Test.
3. Electrical Inspector must perform a final electrical inspection of the fire alarm system prior to LAFD fire alarm test.

FIRE ALARM - LIFE SAFETY CONTRACTOR

APPROVED PLANS AND PERMIT SIGN DATE / /	COMPONENTS SUPERVISION / NFPA 72 SIGN DATE / /	BUILDING COMMUNICATION SIGN DATE / /	A/C SHUTDOWN SIGN DATE / /
COMPLETE ALL CONSTRUCTION SIGN DATE / /	DEVICE ANNUNCIATION SIGN DATE / /	SUBSEQUENT ALARM ACTIVATION SIGN DATE / /	STAIRWELL PRESSURIZATION SIGN DATE / /
FIRE RATED CONSTRUCTION SIGN DATE / /	CONTROL PANEL STATUS SIGN DATE / /	SPECIAL EXTINGUISHING / PRE ACTION SYSTEM SIGN DATE / /	BUILDING, AUXILIARY AND OUTSIDE AIR SIGN DATE / /
FIRE RATED PENETRATIONS SIGN DATE / /	VOICE/FIRE TONE 15 dBA ABOVE AMBIENT SIGN DATE / /	SEQUENCE OF OPERATION VERIFICATION SIGN DATE / /	FIRE DAMPER OPERATION SIGN DATE / /
INITIATING DEVICE(S) TESTED LOCATION OF DEVICE(S) TO BE VERIFIED BY LAFD	STROBE LOCATION, CANDELA / NFPA 72, ADA LOCATION OF DEVICE(S) SHALL BE VERIFIED BY LAFD	ELECTRIC DOOR LOCKING PER LAFD SIGN DATE / /	ELEVATOR RECALL SIGN DATE / /

ELECTRICAL CONTRACTOR

APPROVED PLANS AND PERMIT SIGN DATE / /	FIRE RATED CONSTRUCTION / PENETRATIONS SIGN DATE / /	ELECTRIC DOOR LOCKING PER LAFD SIGN DATE / /	EXIT SIGN(S) TESTED LOCATION OF EXIT LIGHTING SHALL BE VERIFIED BY LAFD
COMPLETE ALL CONSTRUCTION SIGN DATE / /	EXIT SIGN CIRCUITRY SIGN DATE / /	EMERGENCY LIGHTING TESTED LOCATION OF LIGHTING SHALL BE VERIFIED BY LAFD	EXIT PATH VERIFICATION SIGN DATE / /

MECHANICAL CONTRACTOR

APPROVED PLANS AND PERMIT SIGN DATE / /	FIRE RATED PENETRATIONS SIGN DATE / /	BUILDING, AUXILIARY AND OUTSIDE AIR SIGN DATE / /	FIRE DAMPER OPERATION SIGN DATE / /
COMPLETE ALL CONSTRUCTION SIGN DATE / /	CONTROL PANEL STATUS SIGN DATE / /	STAIRWELL PRESSURIZATION SIGN DATE / /	OTHER SIGN DATE / /
FIRE RATED CONSTRUCTION SIGN DATE / /	A/C SHUTDOWN SIGN DATE / /	SMOKE EVAC SIGN DATE / /	OTHER SIGN DATE / /

GENERAL CONTRACTOR

APPROVED PLANS AND PERMIT SIGN DATE / /	FIRE RATED CONSTRUCTION / PENETRATIONS SIGN DATE / /	FIRE DOOR INSTALLATION / NFPA 80 SIGN DATE / /	DOOR DROP / LATCH SIGN DATE / /
COMPLETE ALL CONSTRUCTION SIGN DATE / /	RATED DOOR HARDWARE / LABEL SIGN DATE / /	EVACUATION SIGNAGE SIGN DATE / /	OTHER SIGN DATE / /

TOTAL NUMBER OF LIFE SAFETY DEVICES TO BE TESTED SIGN DATE / /	VERIFIED BY GENERAL CONTRACTOR (NAME) SIGN DATE / /	LAFD INSPECTOR NAME / PHONE #	LIFE SAFETY PERMIT NUMBER
FIRE-WARNING SYSTEM PRE TESTED BY SIGN DATE / /	VERIFIED BY BUILDING REPRESENTATIVE SIGN DATE / /	JOB PHONE	

(CITY USE ONLY) (CITY USE ONLY) (CITY USE ONLY) (CITY USE ONLY) (CITY USE ONLY)	
FIRE ALARM WIRING COMPLETED ELECTRICAL INSPECTOR SIGNATURE _____ DATE / /	BUILDING FINAL INSPECTION CONDUCTED *(Correction May Be Pending)* BUILDING INSPECTOR SIGNATURE _____ DATE / /

NOTE: BOTH SIDES OF THIS FORM MUST BE FILLED OUT IN ITS ENTIRETY PRIOR TO CALLING FOR LIFE SAFETY INSPECTION.

Permit fees provide for a limited number of inspections. A reinspection fee may be assessed for each inspection when the work for which the inspection was requested is not completed, when inspection records or plans are not available, or there is a failure to provide access.

IN/Form.06 (Rev. 6/1/2005) www.ladbs.org

Sample pre-check list for Fire Life Safety sign off.

1.21. QUALITY ASSURANCE

1.21.1. All labor shall be thoroughly competent and skilled. All work shall be executed in strict accordance with the best practice of the trades.

A sample IT Room that meets LAWA's minimum requirement for a quality installation.

A sample CAT 6A cable installation that meets LAWA's minimum requirement for a quality.

A sample horizontal cable routing that meets LAWA's minimum requirement for a quality.

A sample ladder rack and routing install that meets LAWA's minimum requirement for a quality.

1.22. INSPECTION

1.22.1. All IT infrastructure shall be inspected.

1.22.2. LAWA shall be notified at least 48-hours in advance of a request for inspection.

1.22.3. Punch lists created following an inspection shall be remedied immediately.

1.22.4. Remedial work shall be re-inspected.

1.22.5. LAWA shall have the right to reject any materials work that is not in compliance with these standards.

1.22.6. LAWA reserves the right to inspect all facets of all projects that contain an IT infrastructure.

1.22.7. LAWA reserves the right to take pictures and video tape all facets of all projects that contain an IT infrastructure.

1.23. LABELING

1.23.1. IT Infrastructure components shall be labeled. All labels should use an Arial font or equivalent. Font size shall be as large as is reasonable to be viewed from 7 feet distance.

1.23.2. All **LAWA equipment cabinets** shall be labeled on the front and back of the cabinet with engraved plastic having 1-inch tall letters. Cabinet labels are to centered left/right on the cabinet. Lettering is to say Rack (because "Cabinet" is too long) and the cabinet number. Facing a row of cabinets from the front door, cabinet #1 is the cabinet adjacent to the wall counting from left to right.

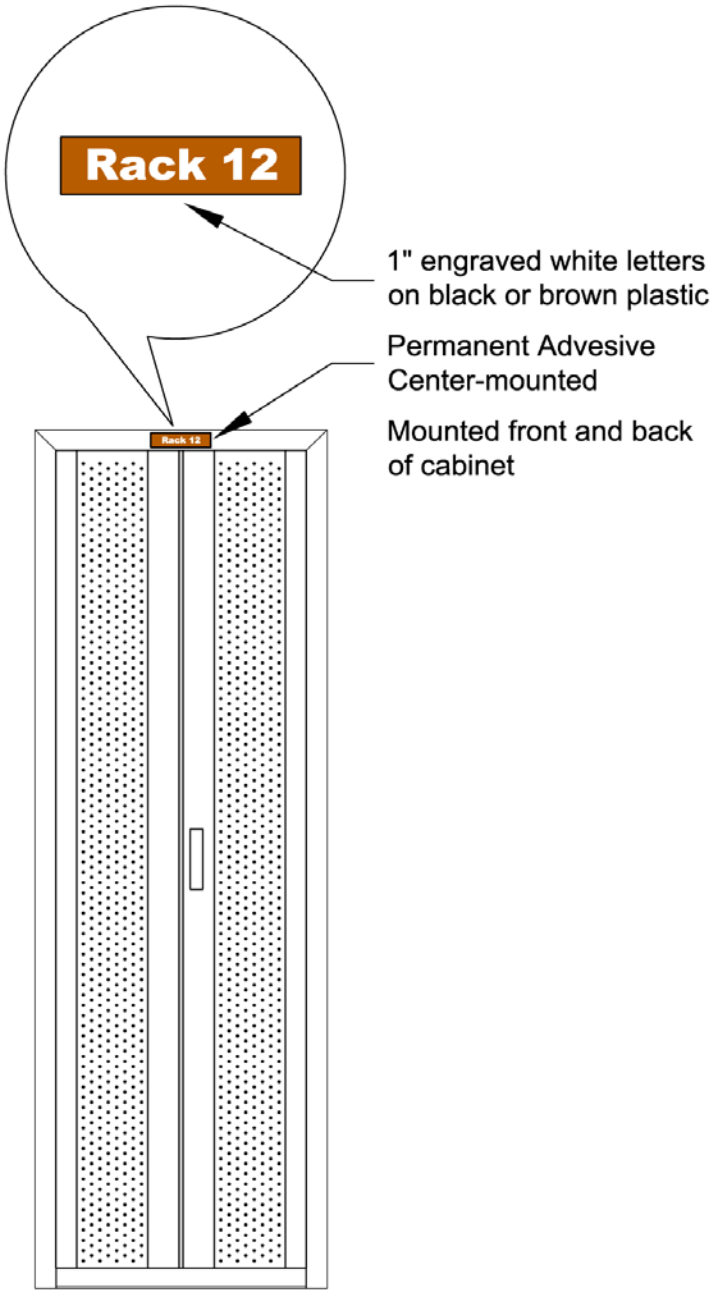

LAWA cabinet labels located on the front and back of equipment cabinets.

1.23.3. All **Tenant Wiring Closet equipment cabinets** shall be labeled on the front and back of the cabinet with engraved plastic having 1-inch tall letters. Cabinet labels are to centered left/right on the cabinet. Lettering is to say Rack (because "Cabinet" is too long) and the cabinet number. Facing a row of cabinets from the front door, cabinet #1 is the cabinet adjacent to the wall counting from left to right.

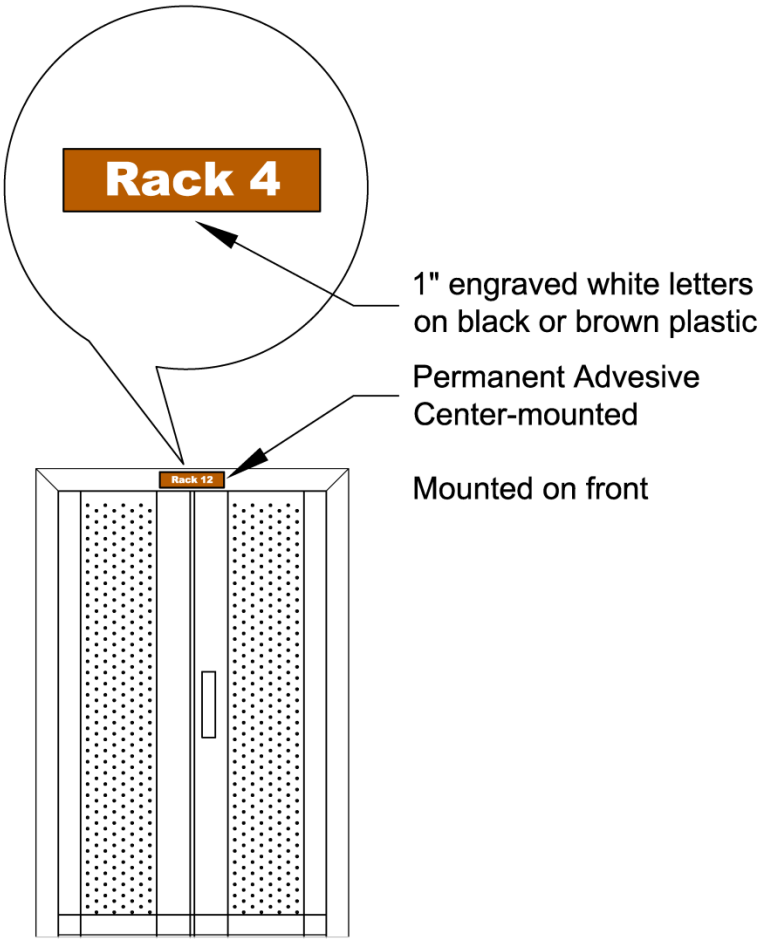

Tenant equipment cabinet labels located on the front.

1.23.4. All **Telecommunications Enclosures (TE, Armarac)** shall be labeled on the outside in the upper left front corner using 3M 1-inch orange reflective letters. Line 1 shall read "LAWA IT". Line 2 shall read the fiber patch panel located inside. See the fiber patch panel and cable sections for details.

1.23.5. All **Telecommunications Enclosures (TE, Armarac, etc)** shall be labeled on the inside door in the upper left corner using a Brother, Brady, or equivalent labeler using strong adhesive so the labels do not curl and separate. Line 1 shall read the origin of the fiber cable(s). Line 2 shall read the destination of the fiber cable(s). See the fiber patch panel and fiber cable sections for details.

1.23.6. All **Outdoor Pedestals** shall be labeled on the outside in the upper left front corner using 3M 1-inch orange reflective letters. Line 1 shall read "LAWA IT". Line 2 shall read the fiber patch panel located inside. See the fiber patch panel and cable sections for details.

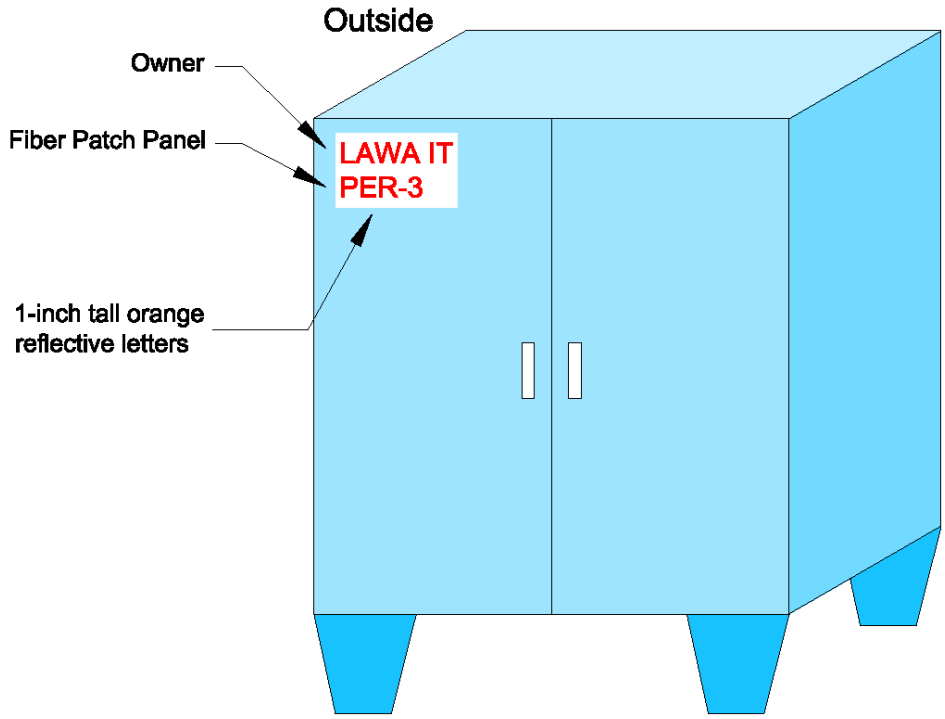

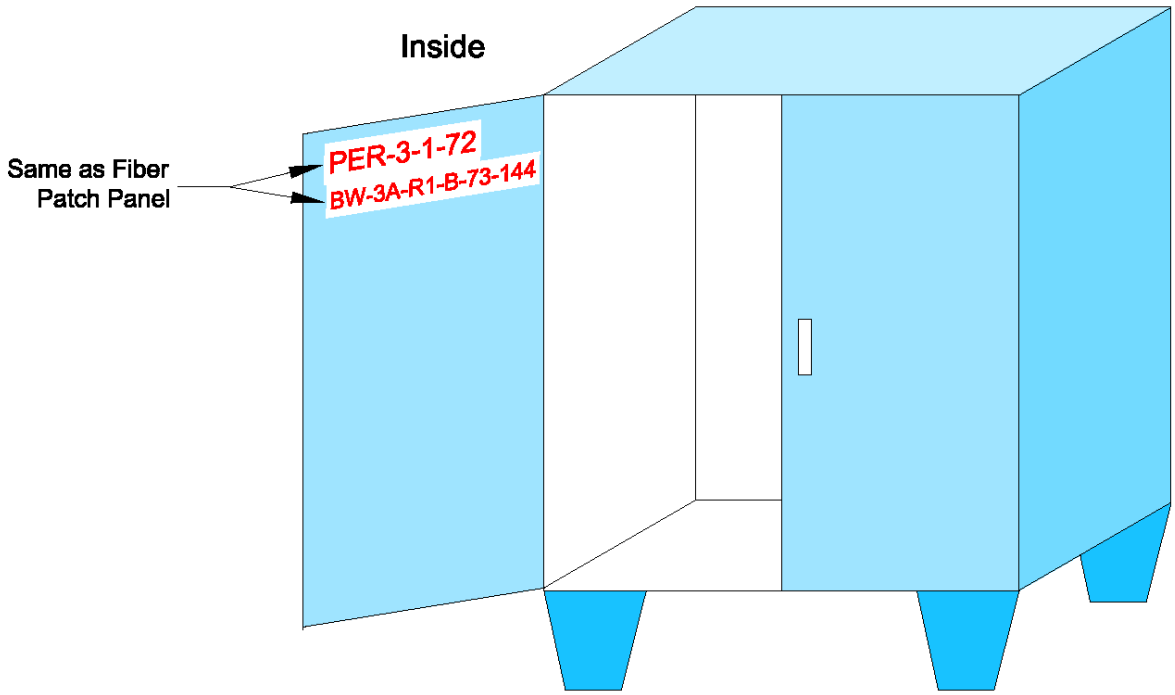

Pedestal cabinet labels located on the front and inside.

1.23.7. All **Outdoor Pedestals** shall be labeled on the inside door in the upper left corner using a Brother, Brady, or equivalent labeler using strong adhesive so the labels do not curl and separate. Line 1 shall read the origin of the fiber cable(s). Line 2 shall read the destination of the fiber cable(s). See the fiber patch panel and cable sections for details.

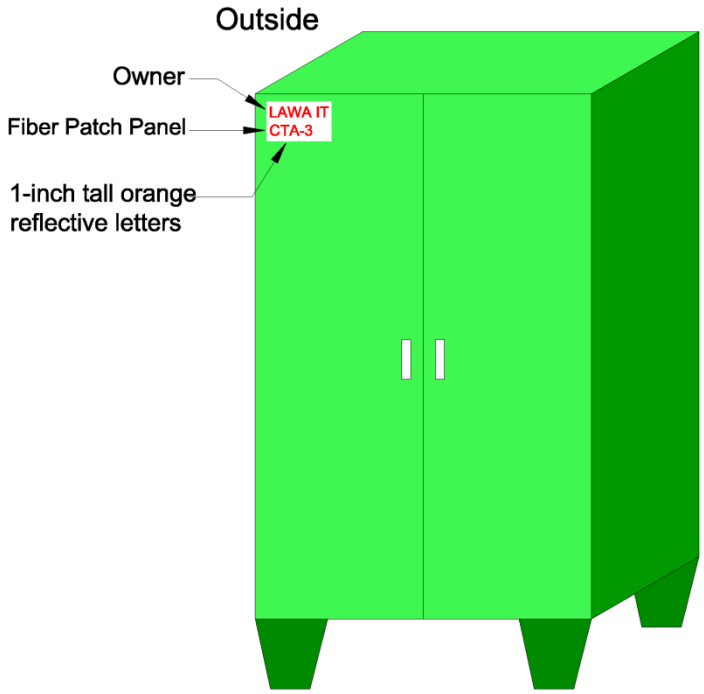

Outdoor cabinet labels located on the front.

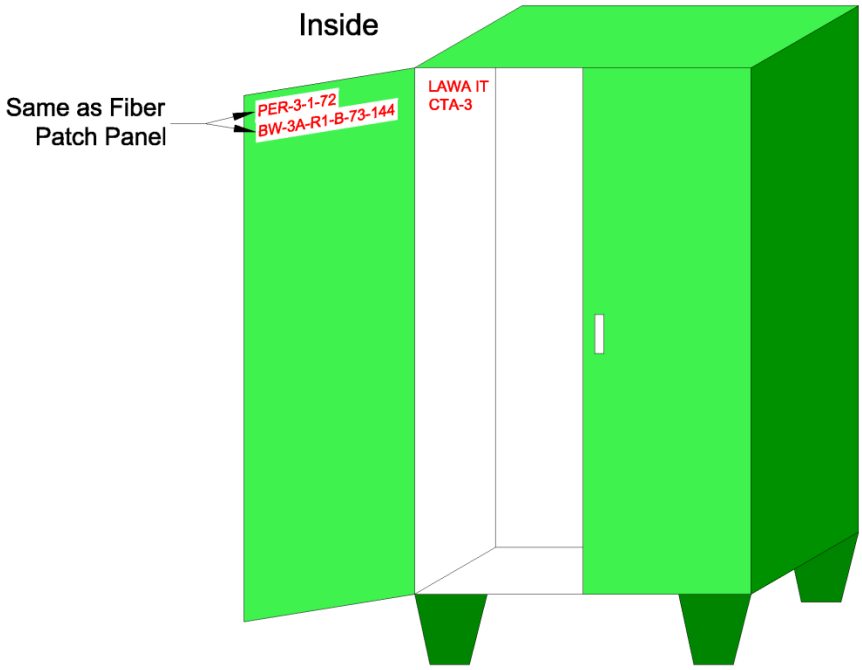

Outdoor cabinet labels located on the inside.

1.23.8. All **Conduits** shall be labeled within twelve (12) inches of each end of the origin and termination points and the entry and exit of all junction and pull poxes along the path. Line 1 shall read "LAWA IT". Line 2 shall read the room number and cabinet number (if applicable). If the conduit is too small for two lines, then the lines may be combined.

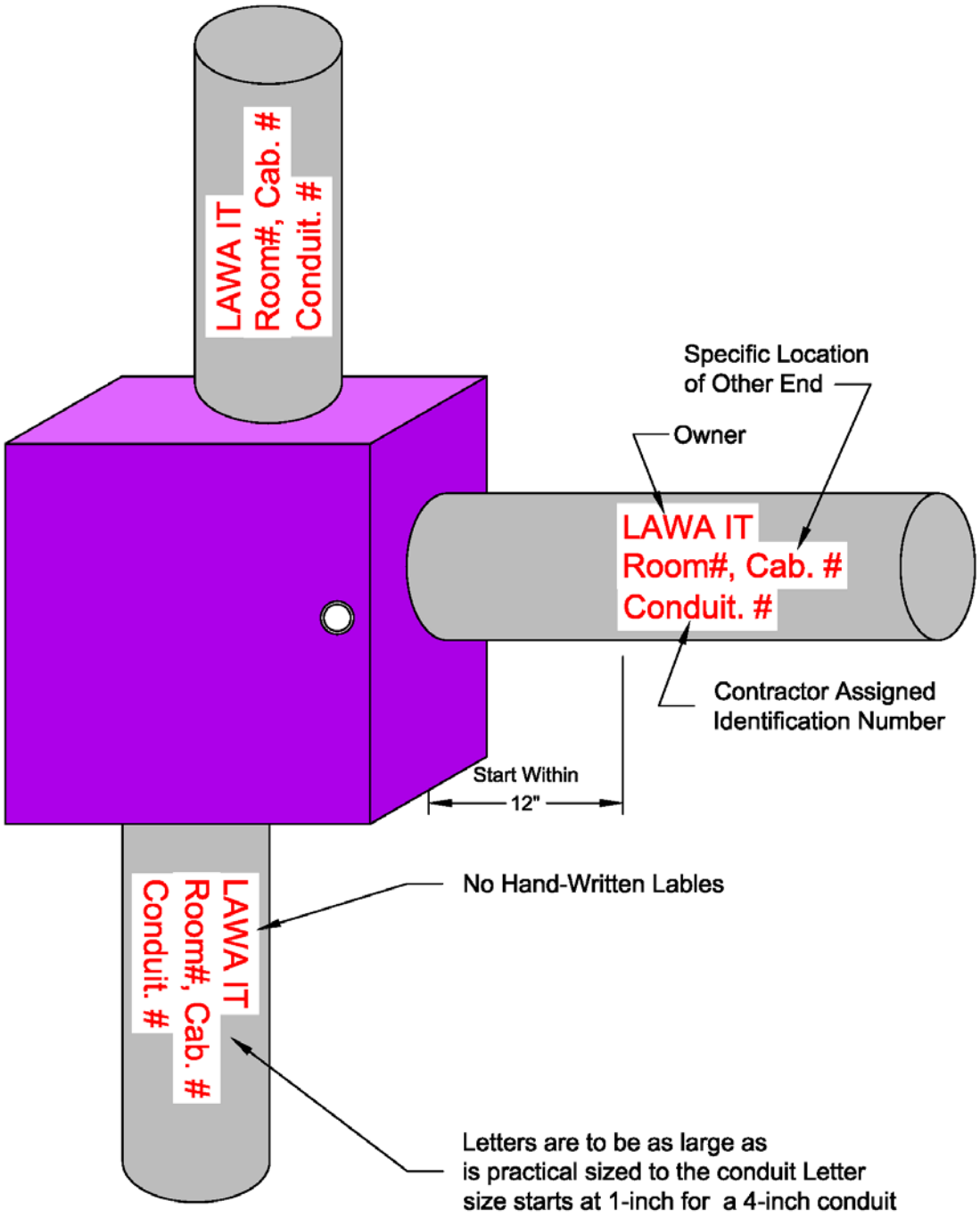

Conduit labels within twelve inches of pull box.

1.23.9. All **Junction Boxes** shall be labeled on the outside in the upper left front corner using 3M 1-inch orange reflective letters. Line 1 shall read "LAWA IT". Line 2 shall **read** the fiber patch panel located inside (if applicable). See the fiber patch panel and cable sections for details. Line 3 shall read the pull box number from the project drawings (if applicable). Line 4 shall read the date installed.

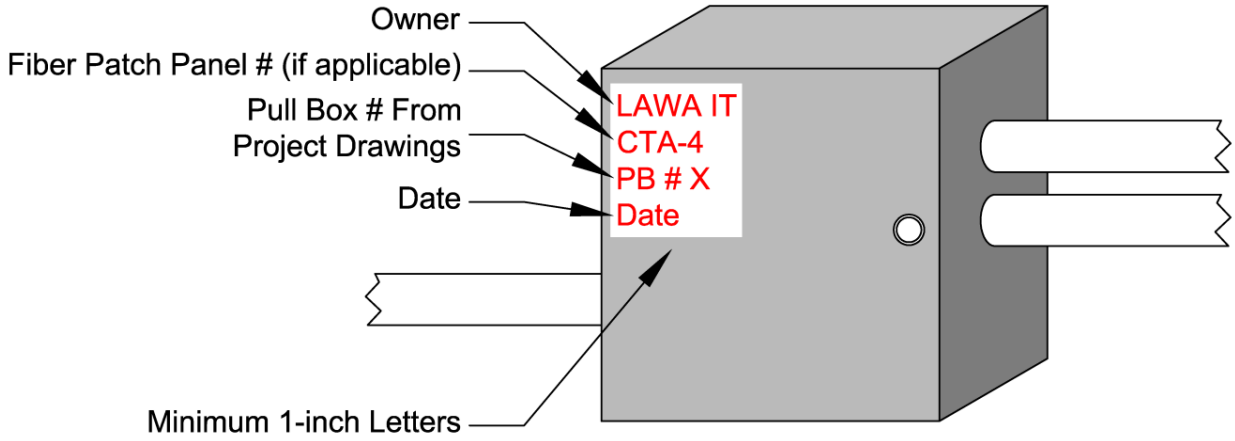

Junction Box labels located on the outside upper left corner.

1.23.10. All **Pull Boxes** shall be labeled on the outside in the upper left front corner using 3M 1-inch orange reflective letters. Line 1 shall read "LAWA IT". Line 2 shall read the pull box number from the project drawings (if applicable). Line 3 shall read the date installed.

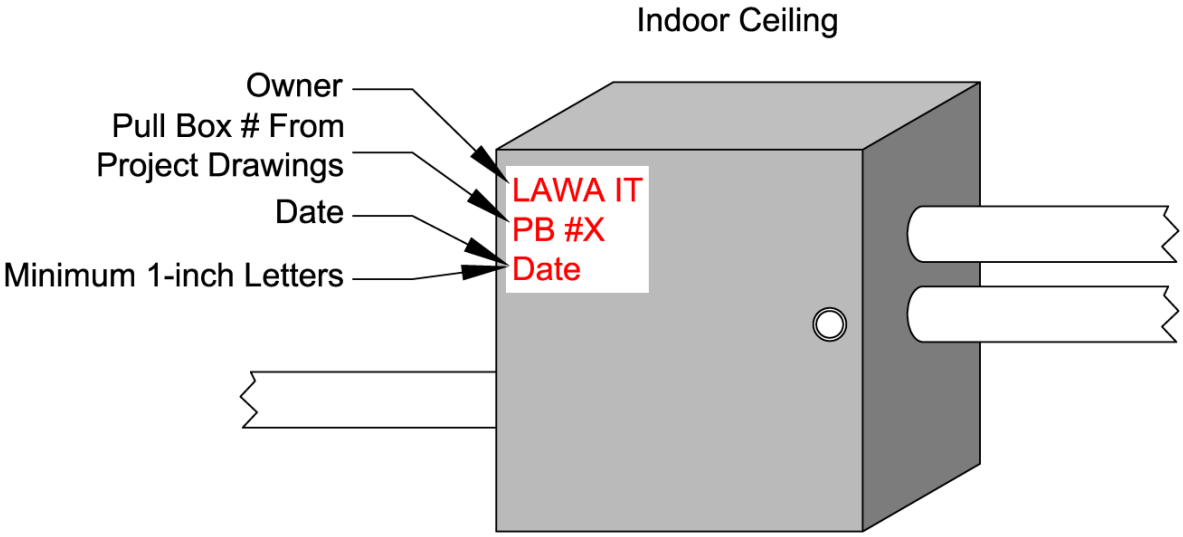

Pull Box labels located on the outside upper left corner.

Sample pull box labeling.

Sample pull box and conduit labeling.

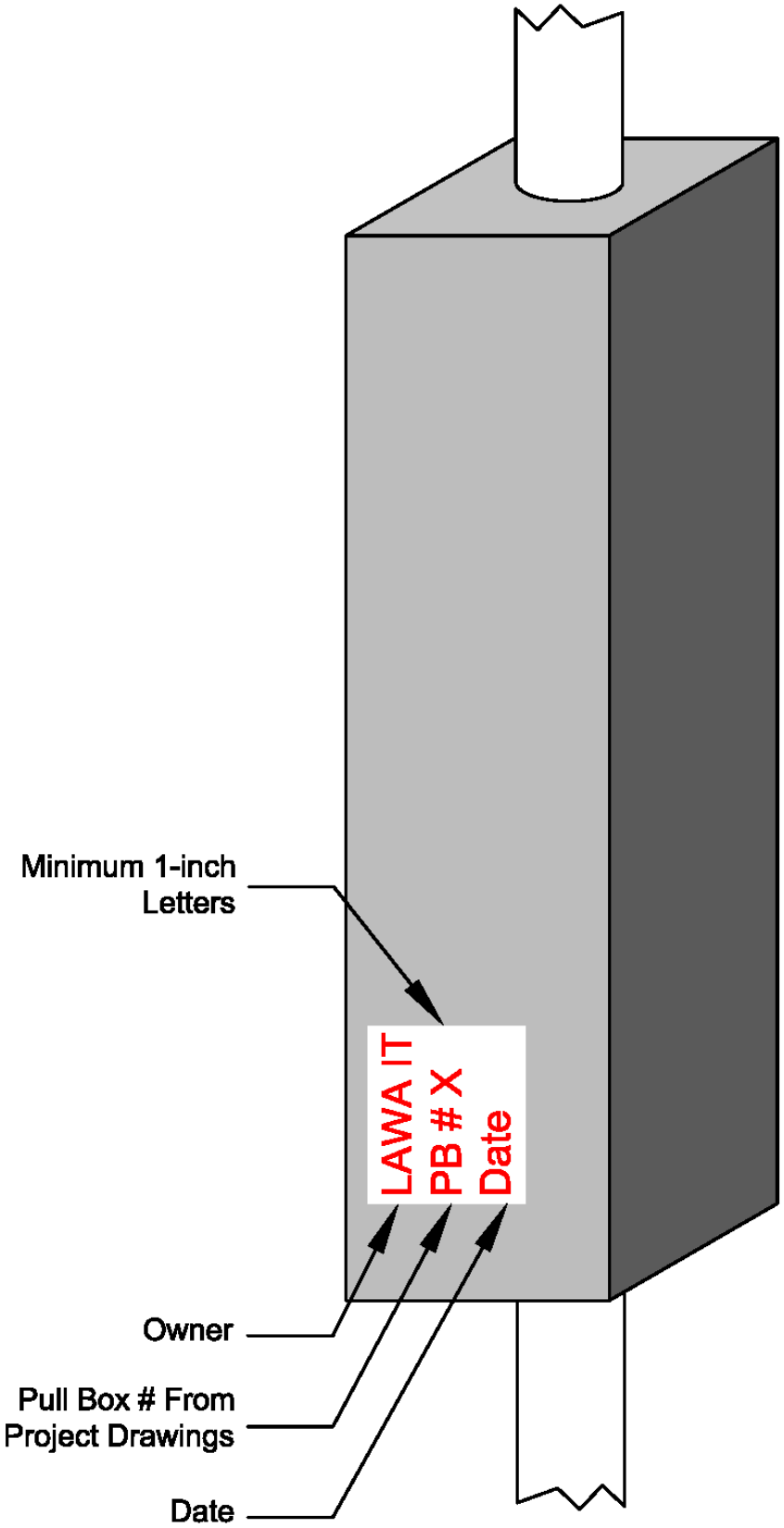

Pull Box labels located on the outside end of a long box.

Sample electrical conduit and panel labeling.

1.23.11. All **Fiber Patch Panels** (rack and wall-mounted) shall be labeled on the outside in the upper left front corner using 3M 1-inch orange reflective letters. Line 1 shall read the fiber patch panel located inside. See the fiber patch panel and cable sections for details.

For Data Centers

BLDG I.D. - R# - S#

- Shelf # starting - at the top of the rack
- Rack or Cabinet #
- Location I.D. - Like CTA or AE or CC or TBIT

Data Center Example #1: AW-R1-1
Data Center Example #2: BW-3C4-01-R3-4

Note: Some IT Rooms have a dash in their Room number that is in addition to the dashes in the labeling scheme Don't get confused by this

For IT Rooms and Other Locations

BLDG I.D. - PP#

- The *nth* patch panel in the building or area Obtain the latest PP number from LAWA
- Location I.D. - Like CTA or AE or CC or TBIT

IT Room Example #1: AW-R1-1-1
IT Room Example #2: SSD-03

Fiber patch panel labels labeling scheme.

1.23.12. All **Fiber Patch Panels** (rack and wall-mounted) shall be labeled on the inside door in the upper left corner using a Brother, Brady, or equivalent labeler using strong adhesive so the labels do not curl and separate. Line 1 shall read the origin of the fiber cable(s). Line 2 shall read the destination of the fiber cable(s). See the fiber patch panel and fiber cable sections for details.

Rack-Mount - Single Door

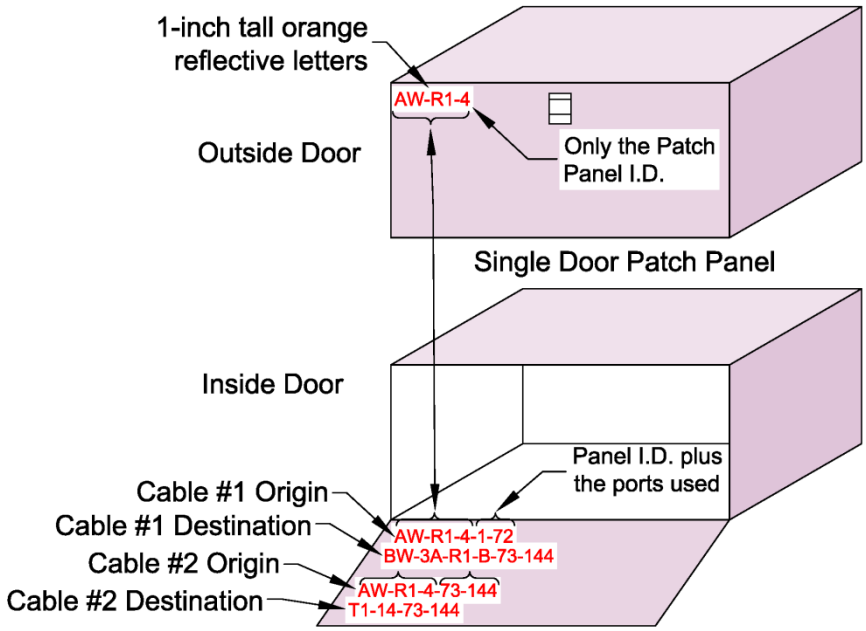

Patch Panel labels located on the outside and inside of panel.

Rack-Mount - Double Door

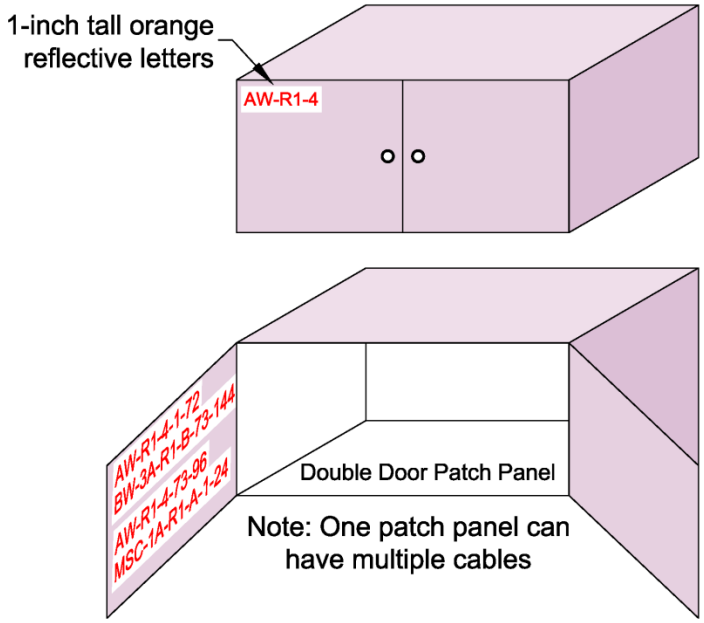

Patch Panel labels located on the outside and inside of panel.

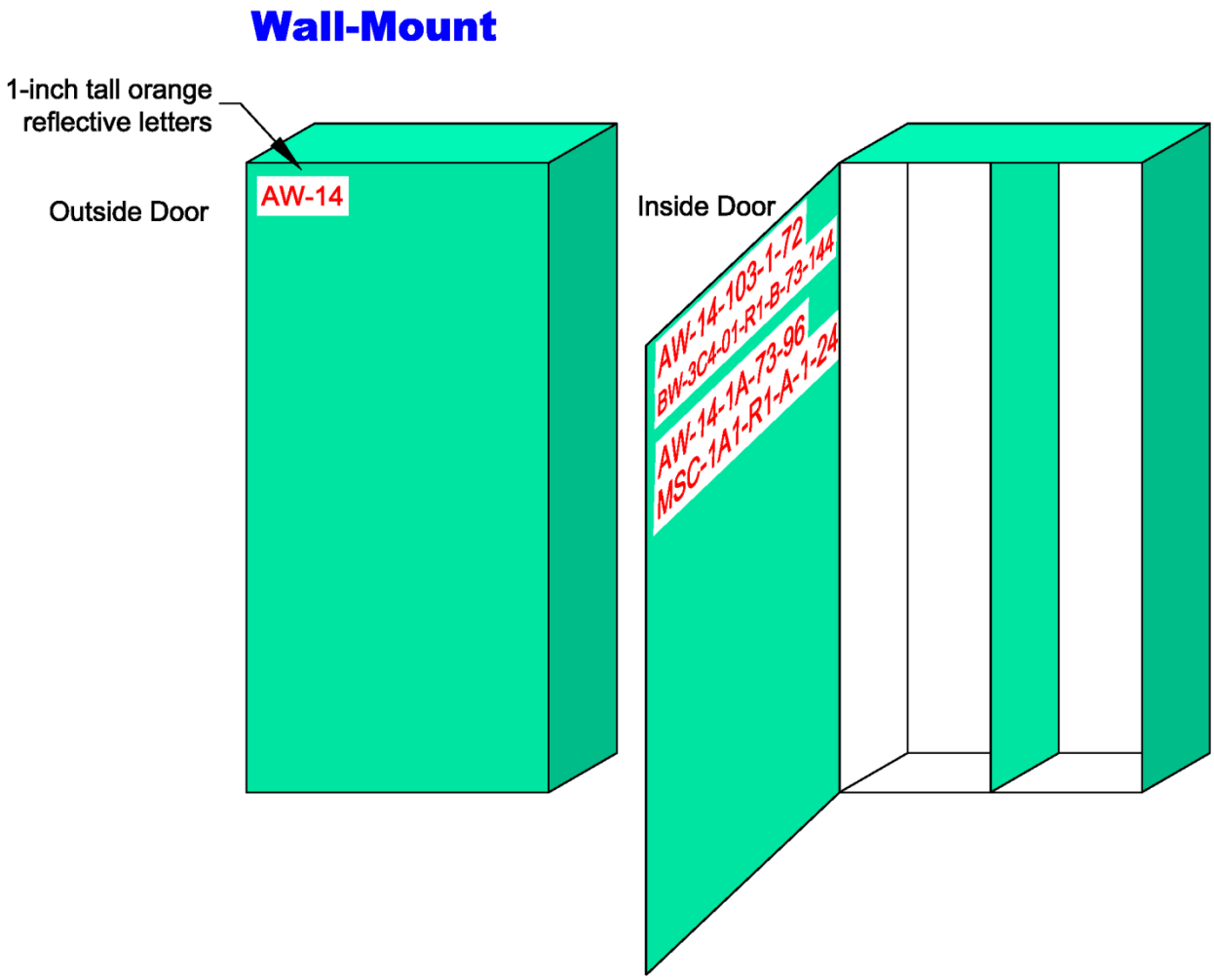

Patch Panel labels located on the outside and inside of panel.

1.23.13. All **Fiber Optic Cables** shall be labeled within twelve (12) inches of each end using a pre-made plastic label with laminating cover. See LAWA for details. Line 1 shall read date installed and No, of strands. Line 2 shall read the origin fiber patch panel. Line 3 shall read the destination fiber patch panel. Line 4 shall read the cable identification number from WireCAD (obtain from LAWA) and the Contractor installing the cable. Within Pull Boxes, fiber cables shall be labeled as above. For all slack loops, fiber cables shall be labeled as above. Within Maintenance Holes, all cables shall be labeled within twelve (12) inches of each entrance and exit conduit and on each cable slack loop. Fiber cables shall also be labeled within twelve (12) inches of entering and exiting splice cases.

Line #1 | Date Installed_____ # of Strands_____

Line #2 | BLDG I.D. - Rm# - R# - S# - P# or BLDG I.D. - PP# - P# — Patch Panel starting port #

Line #3 | BLDG I.D. - Rm# - R# - S# - P# or BLDG I.D. - PP# - P# — Patch Panel starting port #

Line #4 | Cable ID (from WireCAD)_____ Installed By:_____

Label should be machine generated and then pasted and then covered with attached lamination

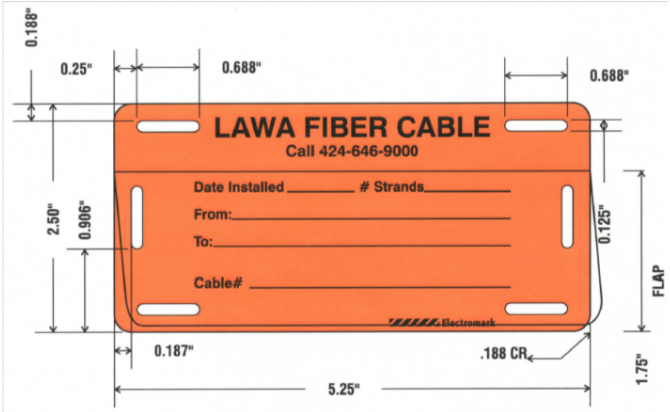

See LAWA for Label Details

Fiber cable label scheme.

Example:

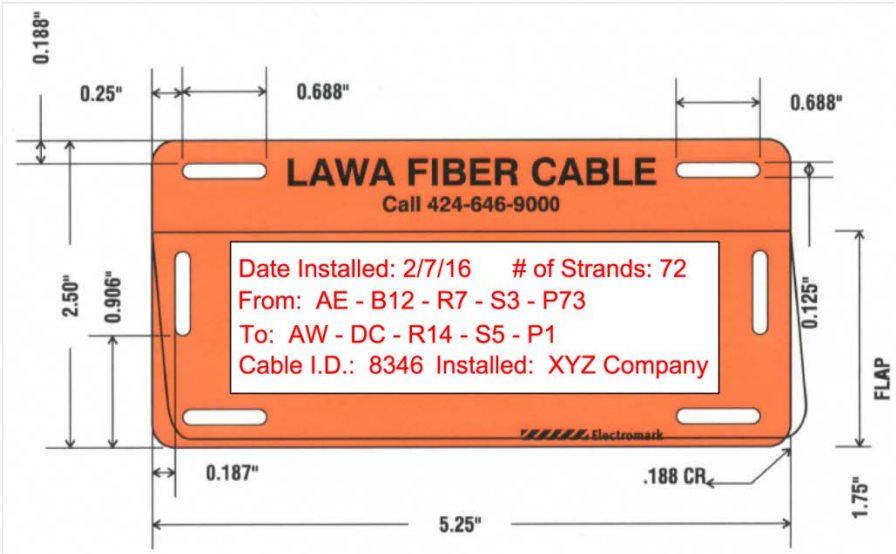

Fiber cable label with laminate overlay for protection.

1.23.14. All **Fiber Optic Jumpers** shall be labeled on each end using non-shrunk heat-shrink labels. Line 1 shall read the origin patch panel and port number of the port you are looking at. Line 2 shall read the destination patch panel and port number. Line 3 shall read the circuit origin followed by a slash followed by the circuit destination. Line 4 shall read the IT System, Date, Circuit I.D> from WireCAD (obtain from LAWA), and the owner or tenant. If there is insufficient room on line 4, then the owner or tenant can be moved to line 1 on the right side.

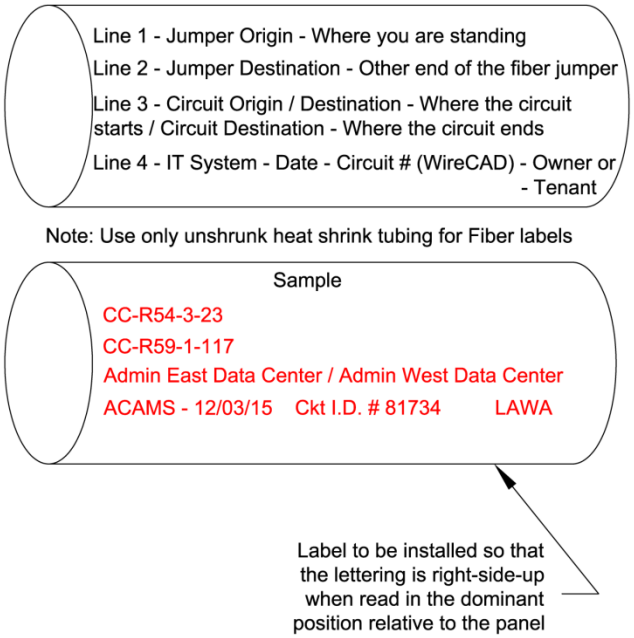

Fiber jumper label scheme.

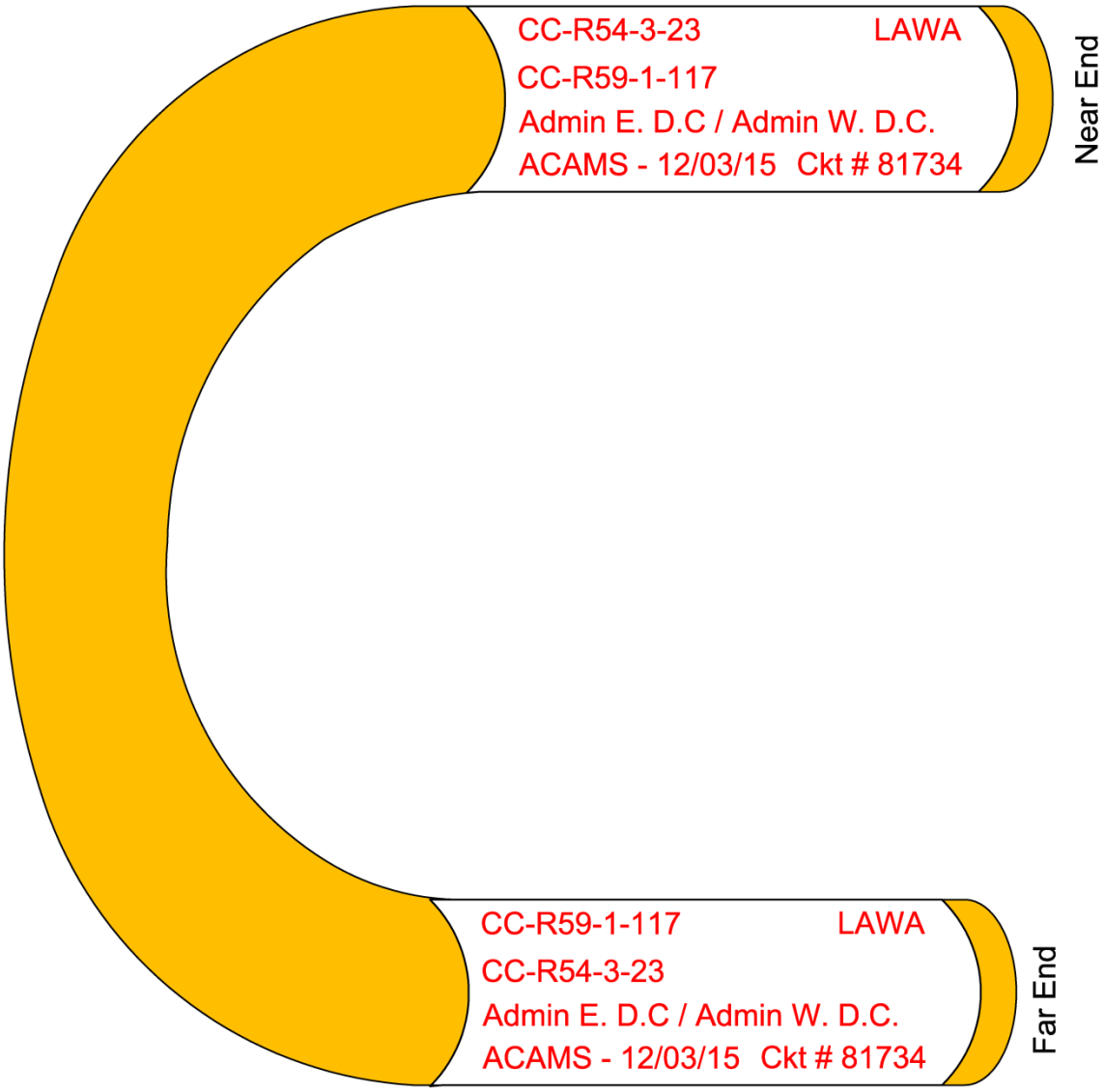

Fiber jumper label sample.

1.23.15. All **Copper Patch Panels** shall be labeled at each port number. Line 1 shall read the location of the corresponding Work Area Outlet. Location examples include room No., Office No., Cubicle No., Floor No, Roof, etc. Line 2 shall read the WAO or the dedicated function of the WAO. Note that sometimes a work area outlet may be dedicated to a particular field device. Examples of function include the specific WAO No. (see WAO labeling scheme), Access Point No., Camera No., Paging Station No., Monitor No., Consolidation Point No..

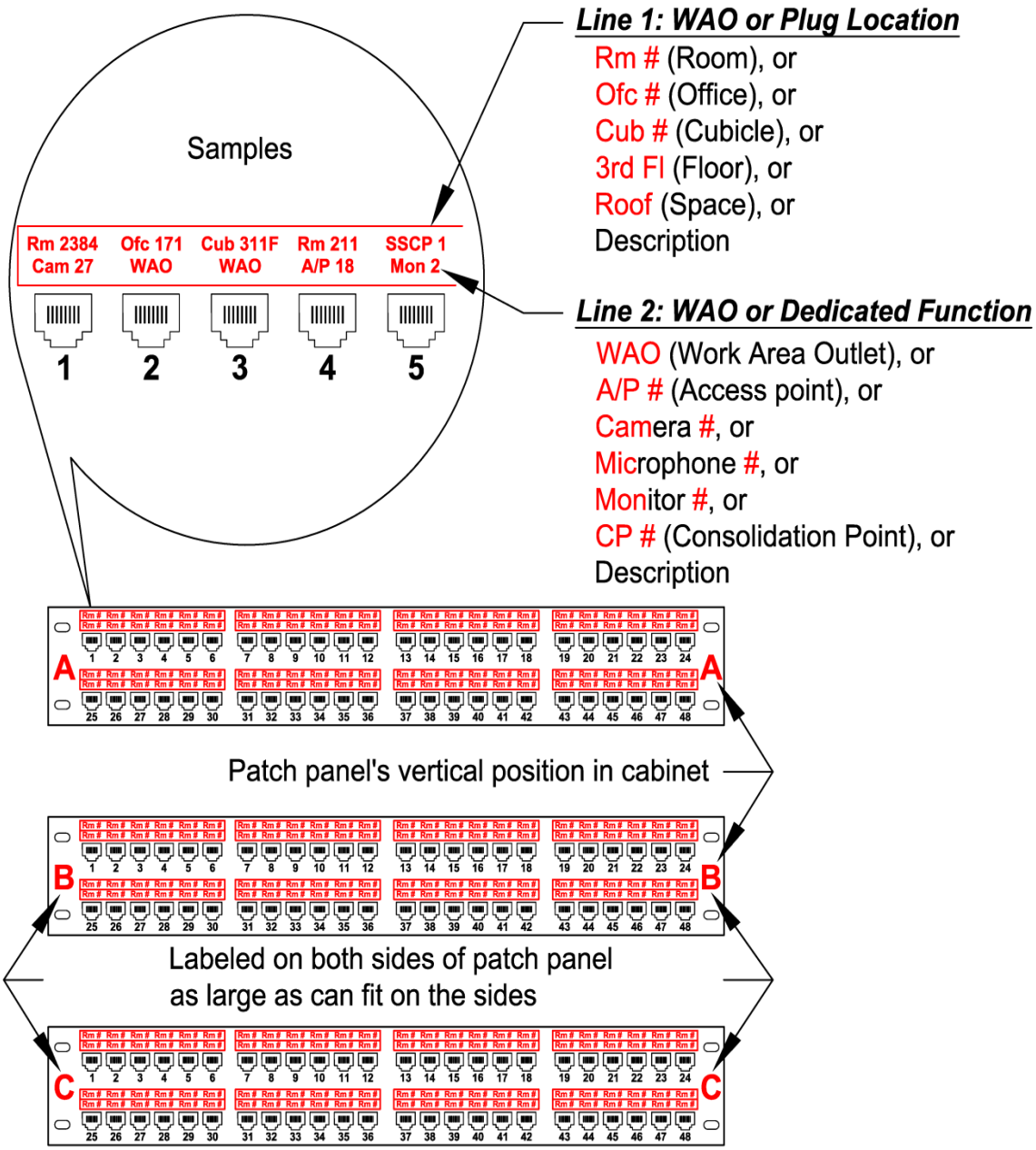

Horizontal copper patch panel label scheme and sample.

1.23.16. **Horizontal CAT 6/6A Cables** between work area outlets and the back of patch panels do not need to be labeled. **Horizontal CAT 6/6A Cables** that terminate in an RF-45 plug to connect equipment, shall be labeled according to the work Area Outlet labeling requirements below.

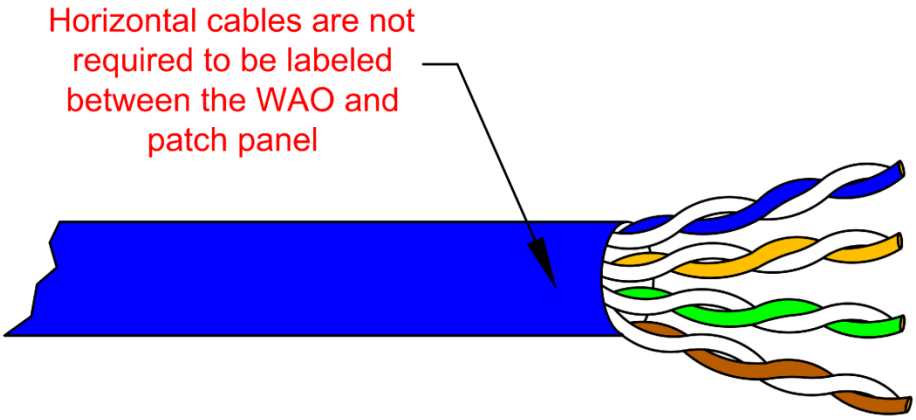

Horizontal copper cables between WAO's and patch panels are not required to be labeled.

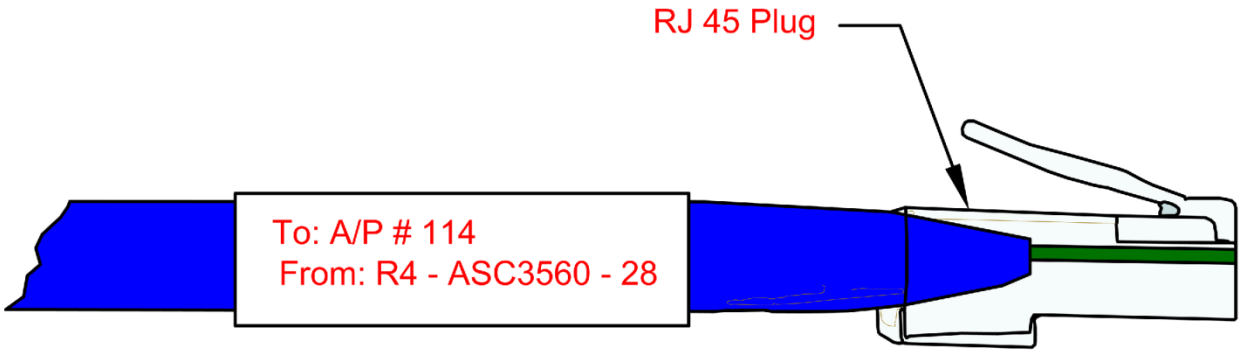

Horizontal cables with RJ 45 Plugs shall be labeled with origin and destination.

1.23.17. All **Work Area Outlet faceplates** shall be labeled in two places - at the top of the faceplate, and above each port. The label at the top of the faceplate shall be composed of one line of text made up of four parts. Part one is the locator. Examples of a locator include room no., office no., cubicle no., floor no., roof, etc. Part two is the IT Room no. of the other end of the cable. Part three is the cabinet or rack no. in the IT Room which contains the patch panel. Part four is the vertical position of the patch panel in the cabinet or rack. On the faceplate above each port shall read the respective patch panel port number. Lettering should be between ¼-inch and ½-inch in size.

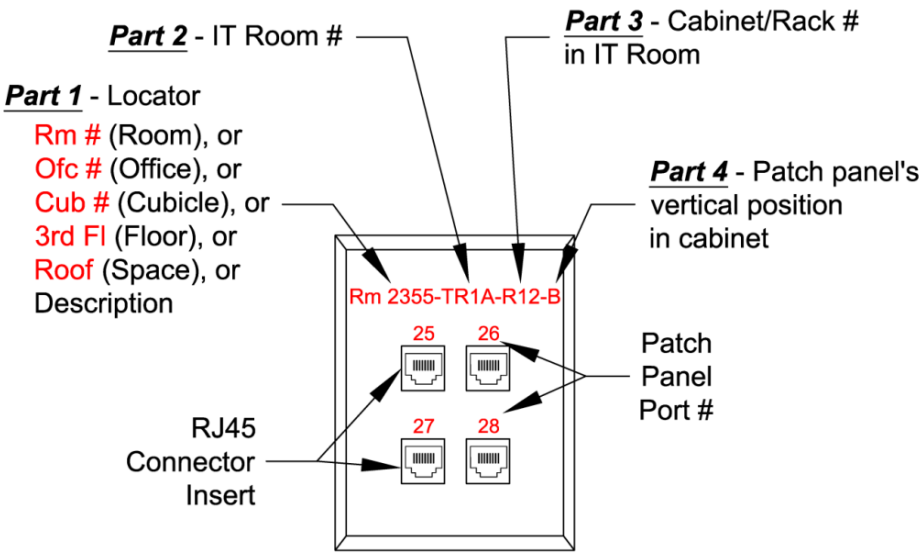

Work Area Outlet faceplate labeling scheme.

1.23.18. All **Work Area Outlet multiport strips (Harmonicas)** shall be labeled in two places - at the top of the Harmonica, and above/below each port. The label at the top of the Harmonica shall be composed of one line of text made up of four parts. Part one is the locator. Examples of a locator include room no., office no., cubicle no., floor no., roof, etc. Part two is the IT Room no. of the other end of the cable. Part three is the cabinet or rack no. in the IT Room which contains the patch panel. Part four is the vertical position of the patch panel in the cabinet or rack. On the Harmonica above/below each port shall read the respective patch panel port number. Lettering should be between ¼-inch and ½-inch in size.

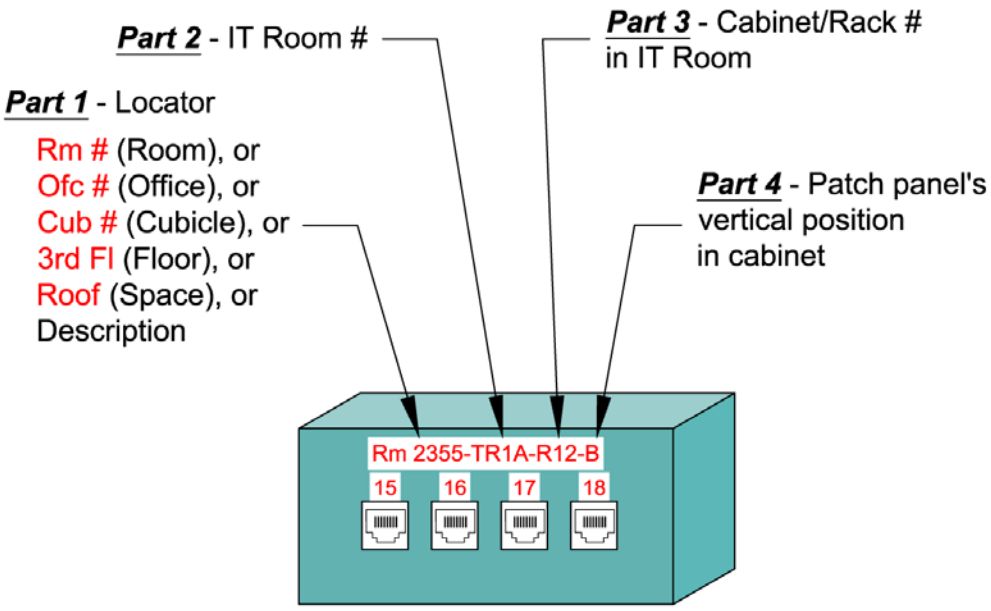

Work Area Outlet "Harmonica" labeling scheme.

1.23.19. All **Work Area Outlet "Biscuits"** shall be labeled in two places - at the top/side of the Biscuit, and above/below each port. The label at the top/side of the Biscuit shall be composed of one line of text made up of four parts. Part one is the locator. Examples of a locator include room no., office no., cubicle no., floor no., roof, etc. Part two is the IT Room no. of the other end of the cable. Part three is the cabinet or rack no. in the IT Room which contains the patch panel. Part four is the vertical position of the patch panel in the cabinet or rack. On the Biscuit above/below each port shall read the respective patch panel port number. Lettering should be between ¼-inch and ½-inch in size.

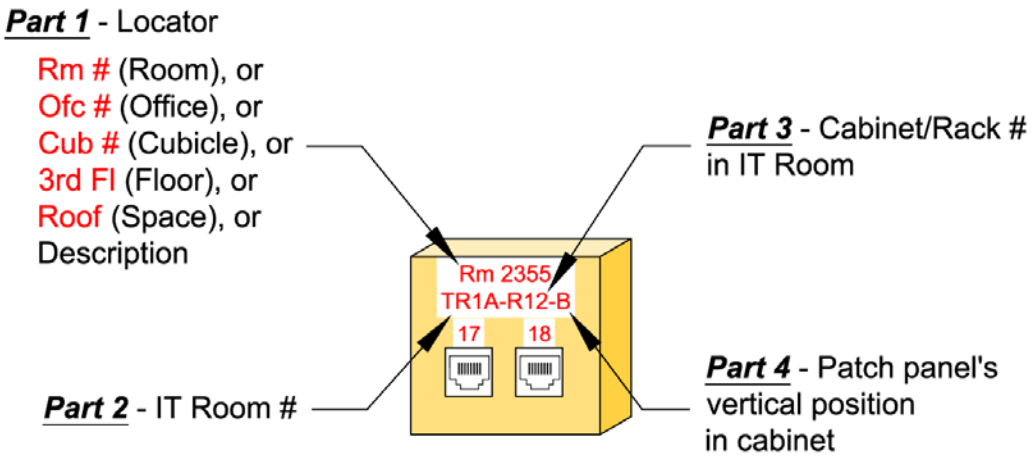

Work Area Outlet "Biscuit" labeling scheme.

1.23.20. All **CAT 6/6A Jumpers** (patch cords) shall be labeled at each end. Line 1 is composed of four parts. Part one reads "To:". Part two reads the cabinet or rack number where the patch panel is located. Parts three and four are combined to read the vertical location of the patch panel in the cabinet and the port number which the jumper is plugged into. Line 2 is composed of four parts. Part one reads "From:". Part two read the cabinet or rack of the network switch. Part three reads the switch type and model number. Part four reads the network switch port no.

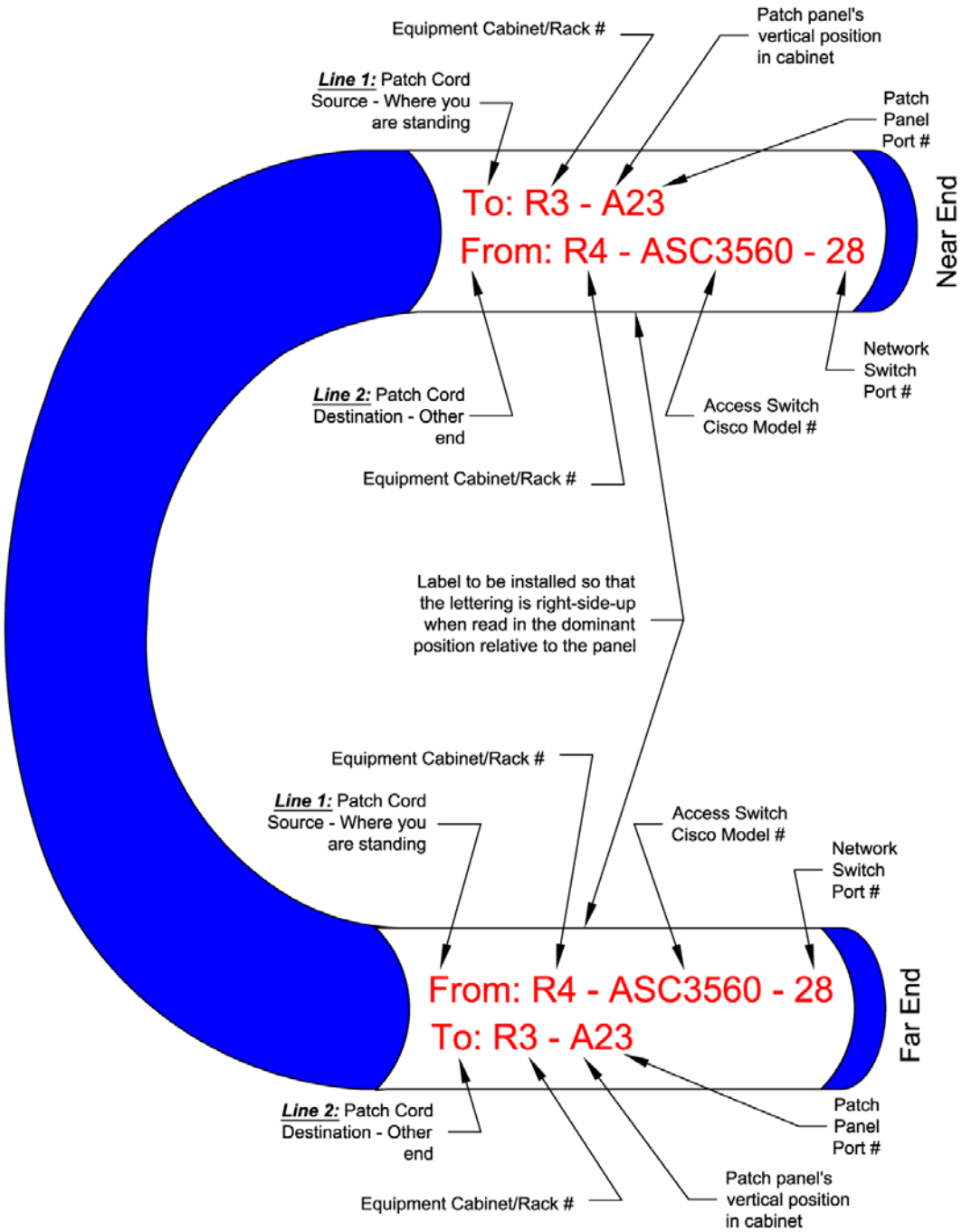

CAT 6/6A labeling scheme.

1.23.21. All network switches shall be labeled on both the from and back of the switch. The network switch label is composed of nine parts as follows:

- Part 1: Airport where the switch is, e.g. L - LAX, O - ONT, V - VNY
- Part 2: Building identification, e.g. AW - Admin West
- Part 3: IT Room number, e.g. 3C4-14
- Part 4: Cabinet or rack number in the IT Room (if applicable)

- Part 5: Switch function, e.g. AS-Access switch, DS-Distribution switch
- Part 6: Network switch manufacturer, e.g. C - Cisco
- Part 7: Network Switch model number, e.g. 3850
- Part 8: Number of ports on the network switch, e.g. 48
- Part 9: The last octet of the IP Address, e.g. 021

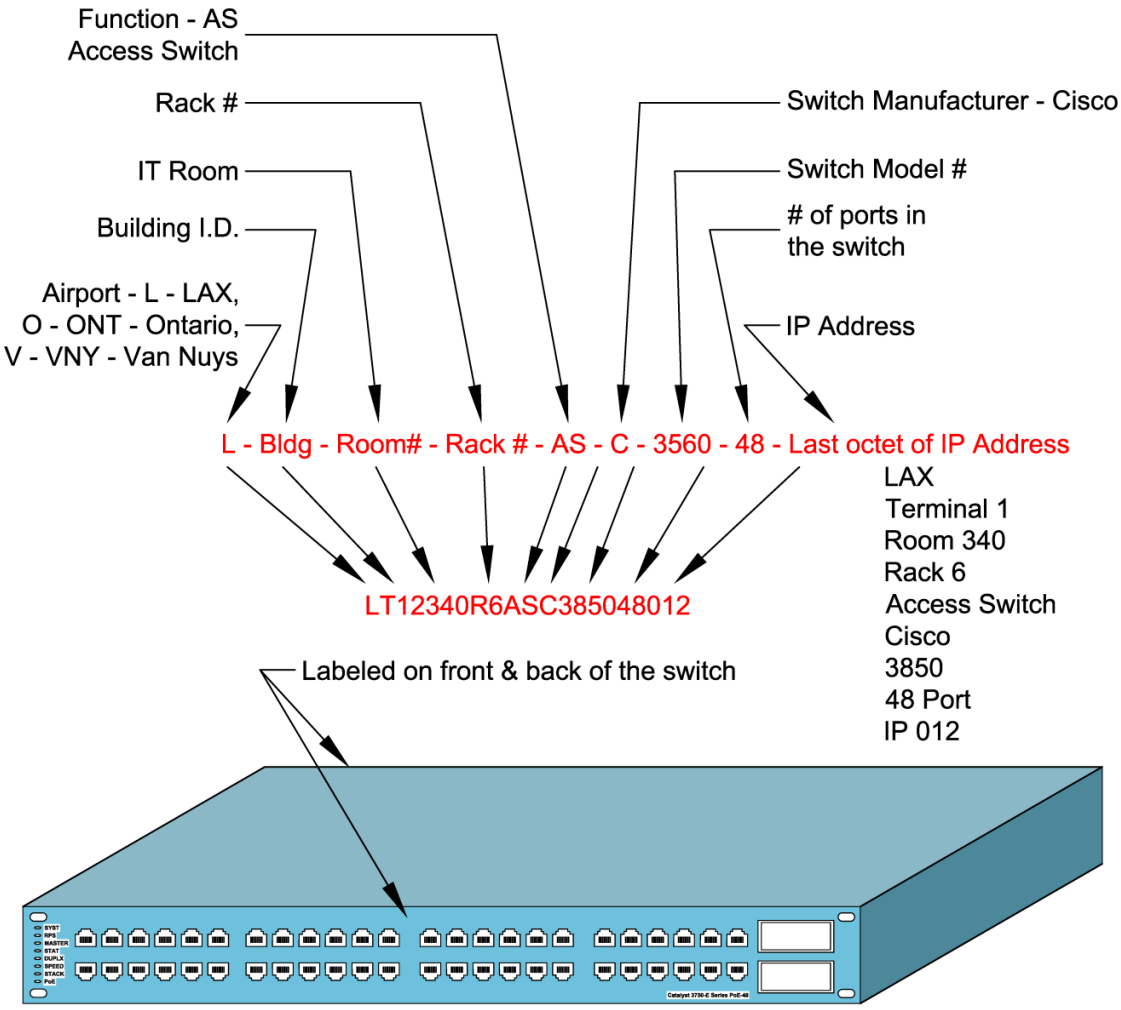

Network Switch labeling scheme.

1.23.22. All Maintenance Hole (manhole) covers shall be labeled to read "COMM". Lettering shall be welded on the outside covers with a minimum of 2-inch letters.

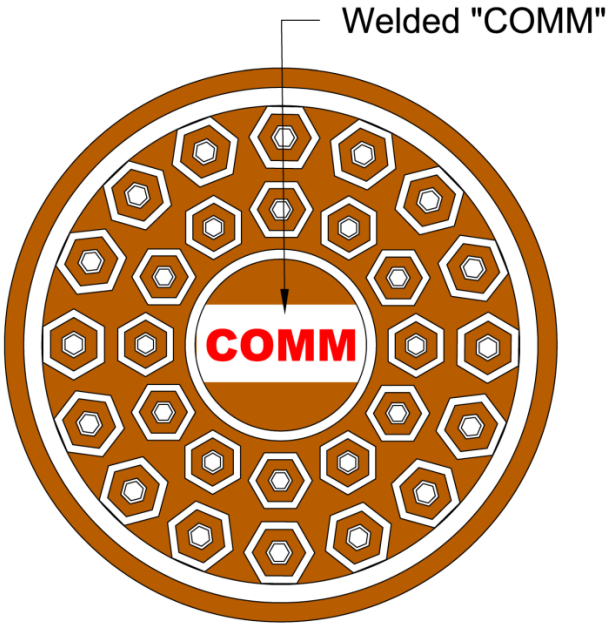

Manhole cover labeling scheme.

1.23.23. All Hand Hole covers shall be labeled to read "COMM". Lettering shall be welded on the manhole covers with a minimum of 2-inch letters.

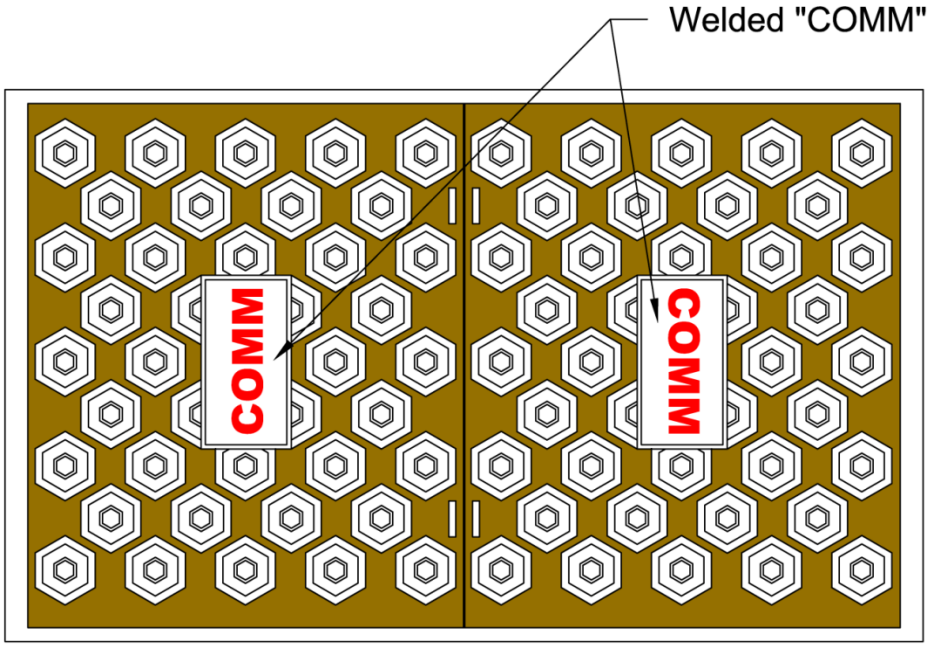

Hand Hole cover labeling scheme.

1.24. DESIGN/AS-BUILT DOCUMENTATION

1.24.1. Designer must submit 30%, 60%, 90%, & 100% DWG and PDF electronic design files for LAWA's review and approval. Designer is to work with LAWA staff to use the Box file hosting service to make files available for LAWA. A complete As-Built documentation package is every piece of documentation necessary to understand, locate, operate, maintain, and troubleshoot a system and its connecting infrastructure is required. Refer to the As-Built Samples Section.

1.24.2. As-Built drawings shall be submitted in hard copy and Autodesk Map3D format (provided to LAWA via Box.com account).

1.24.3. As-Built drawing packages shall have a master drawing index with key plans to reference all geographic areas.

1.24.4. As-Built Documentation shall include the following:

- Site plan
- Floor plans
- Shop drawings
- Elevation drawings
- Riser drawings
- Maintenance Hole Butterfly Maps
- Plan Views
- System singleline diagrams
- Point-to-point Interconnect diagrams
- Isometric drawings
- Photographs in digital format with metadata (Metadata includes system type - power/HVAC/network, etc., GIS coordinates, text description of what is being shown, etc.)
- As-built prints of the conduit installation with routing
- Final acceptance test data sheet
- Updated Material List with quantities, model numbers and serial numbers
- Equipment Specification Sheets
- Test reports
- Excel spreadsheets
- MS Project schedules
- Manufacturer manuals/data sheets/submittals for equipment and materials used
- Manufacturer representatives and telephone numbers
- Operation manuals

1.24.5. All projects shall provide As-Built documentation pertaining to each project as per the diagram below - as the documentation specifically pertains to the project.

1.24.6. Drawings shall follow LAWA's CAD standards – found on the www.lawa.org website at Airport Engineering **>** LAX **>** LAWA CAD Standards.

1.24.7. All submittals shall be in both hard copy and AutoCAD Map 3D DWG format, including all external references.

1.24.8. LAWA shall have the right and ability to manipulate all drawings.

1.24.9. Drawings shall not be password protected unless directed by LAWA.

1.24.10. LAWA shall received all passwords for LAWA-directed protected documentation.

1.24.11. As-Builts shall be "stamped" as As-Built in large bold ½-inch letters.

1.24.12. All IT Rooms shall have an elevation drawing of each wall. Room locations shall be depicted in plan view with expanded details shown by part plan at a scale no less than 1/4" = 1' – 0".

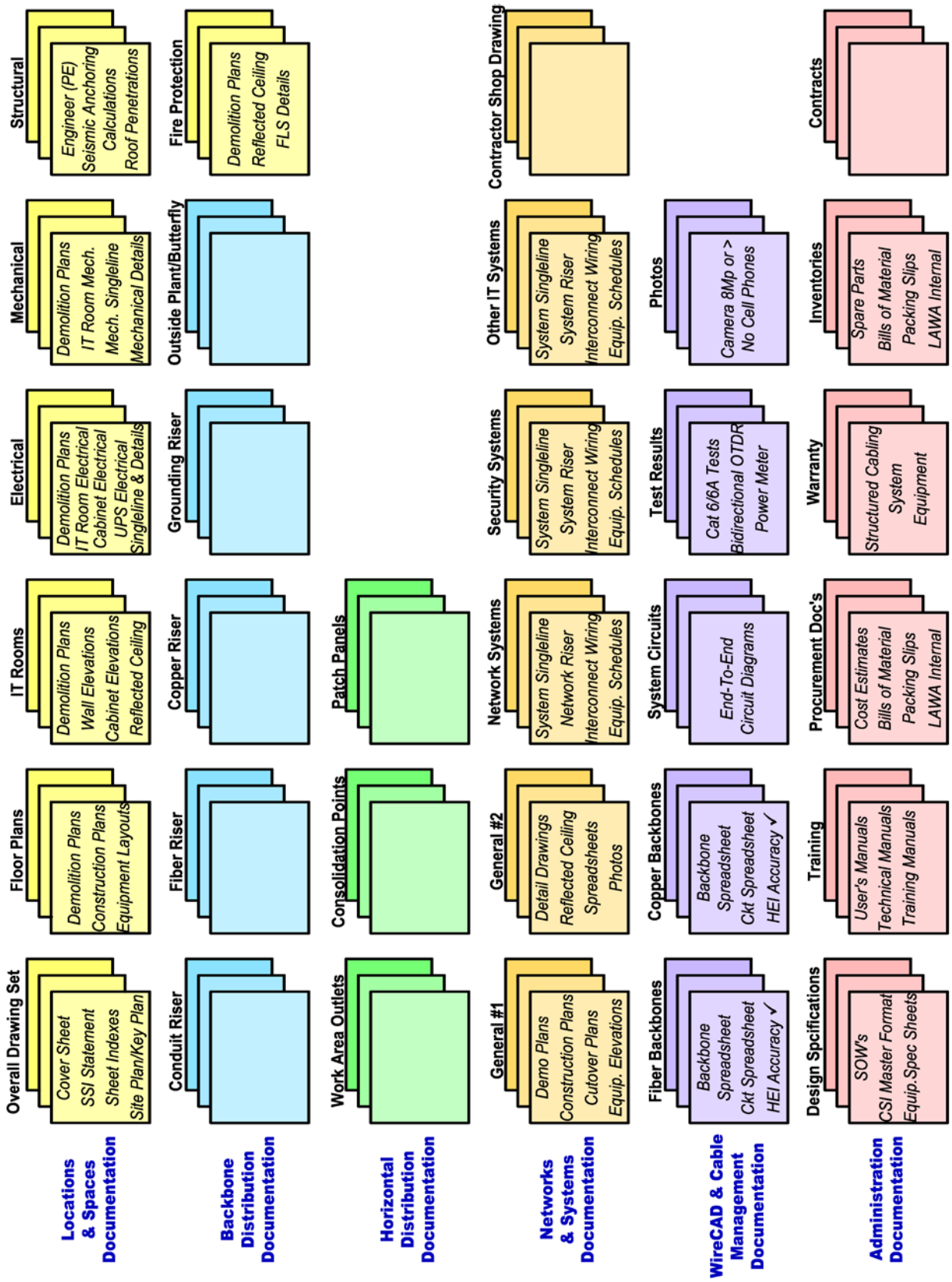

An organized matrix of the types of required as-built drawings.

1.25. AS-BUILT DOCUMENTATION > SAMPLES

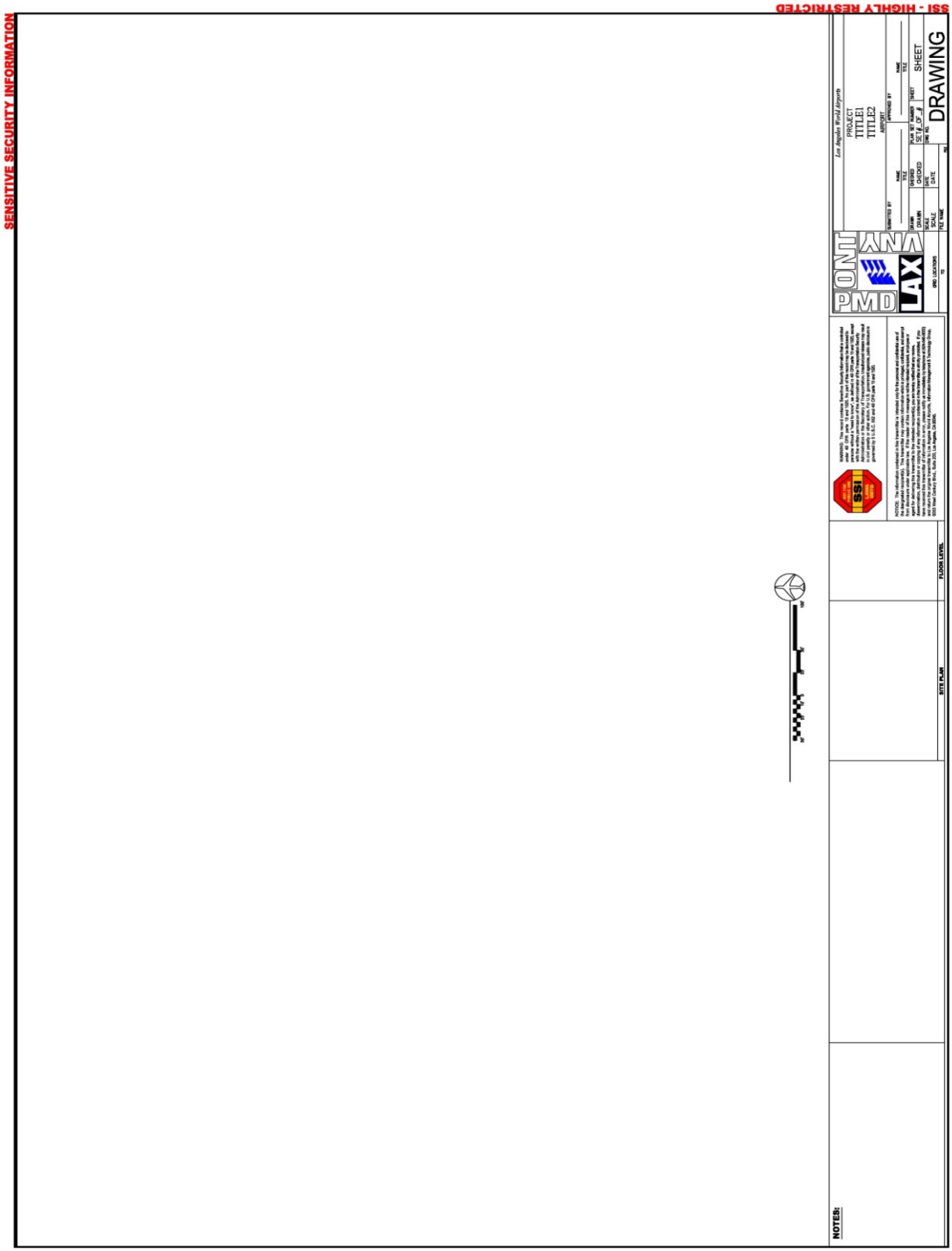

Sample title block.

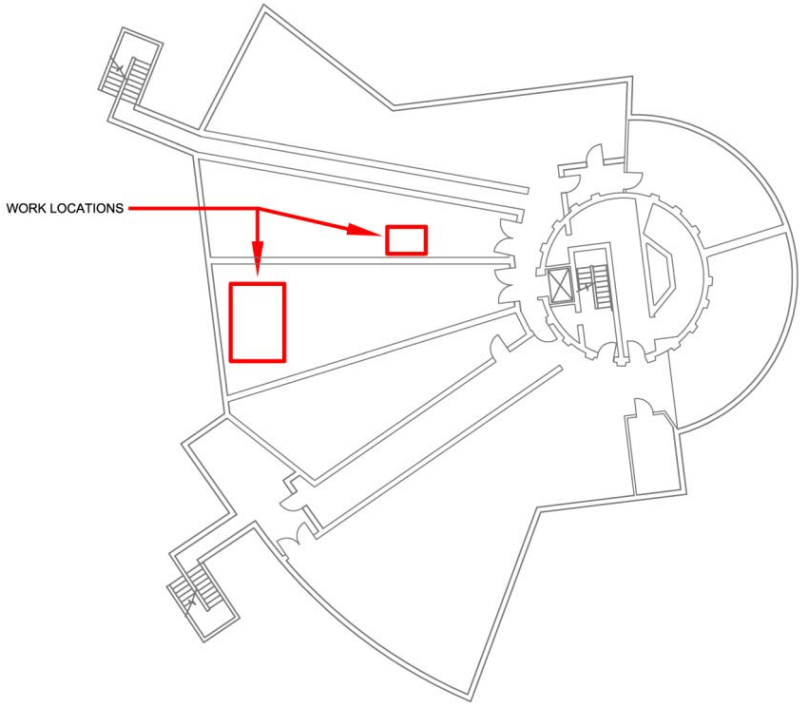

Sample site plan.

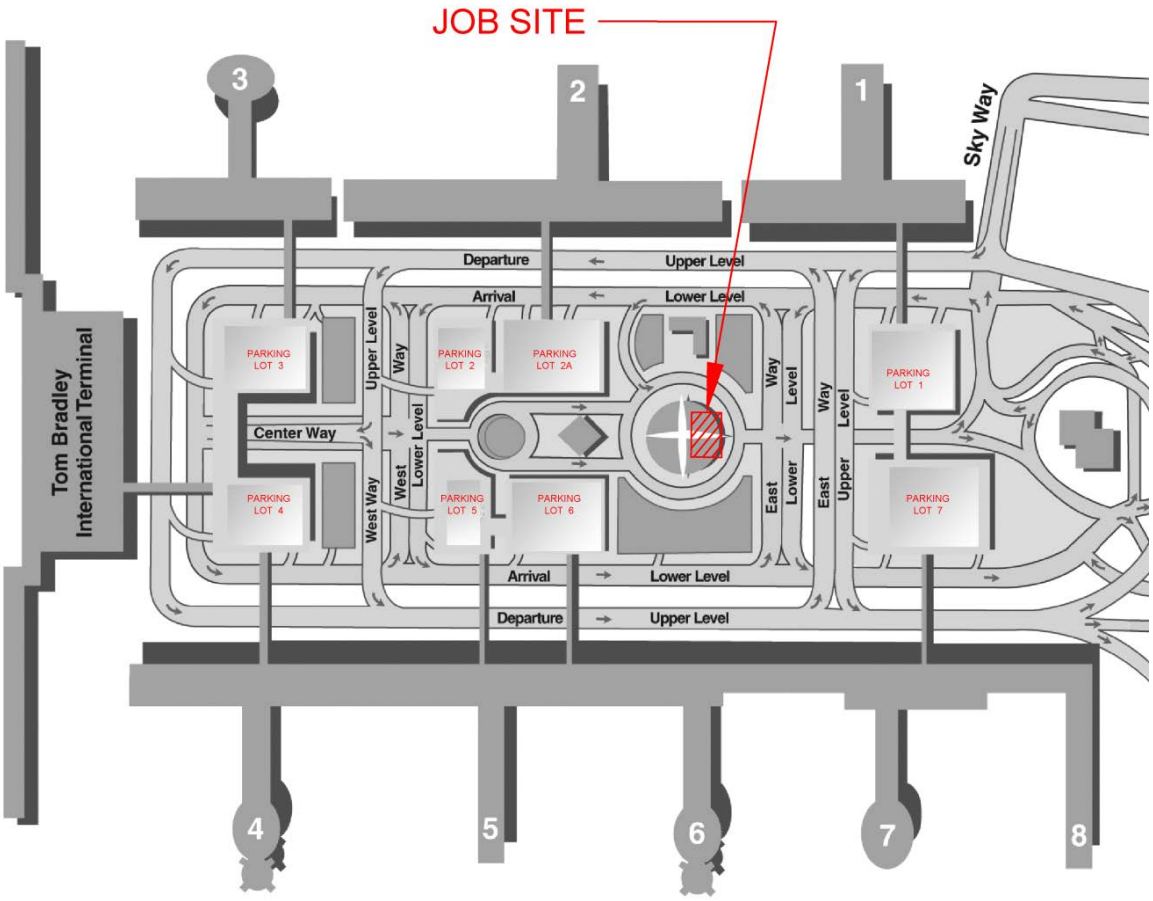

Sample site plan.

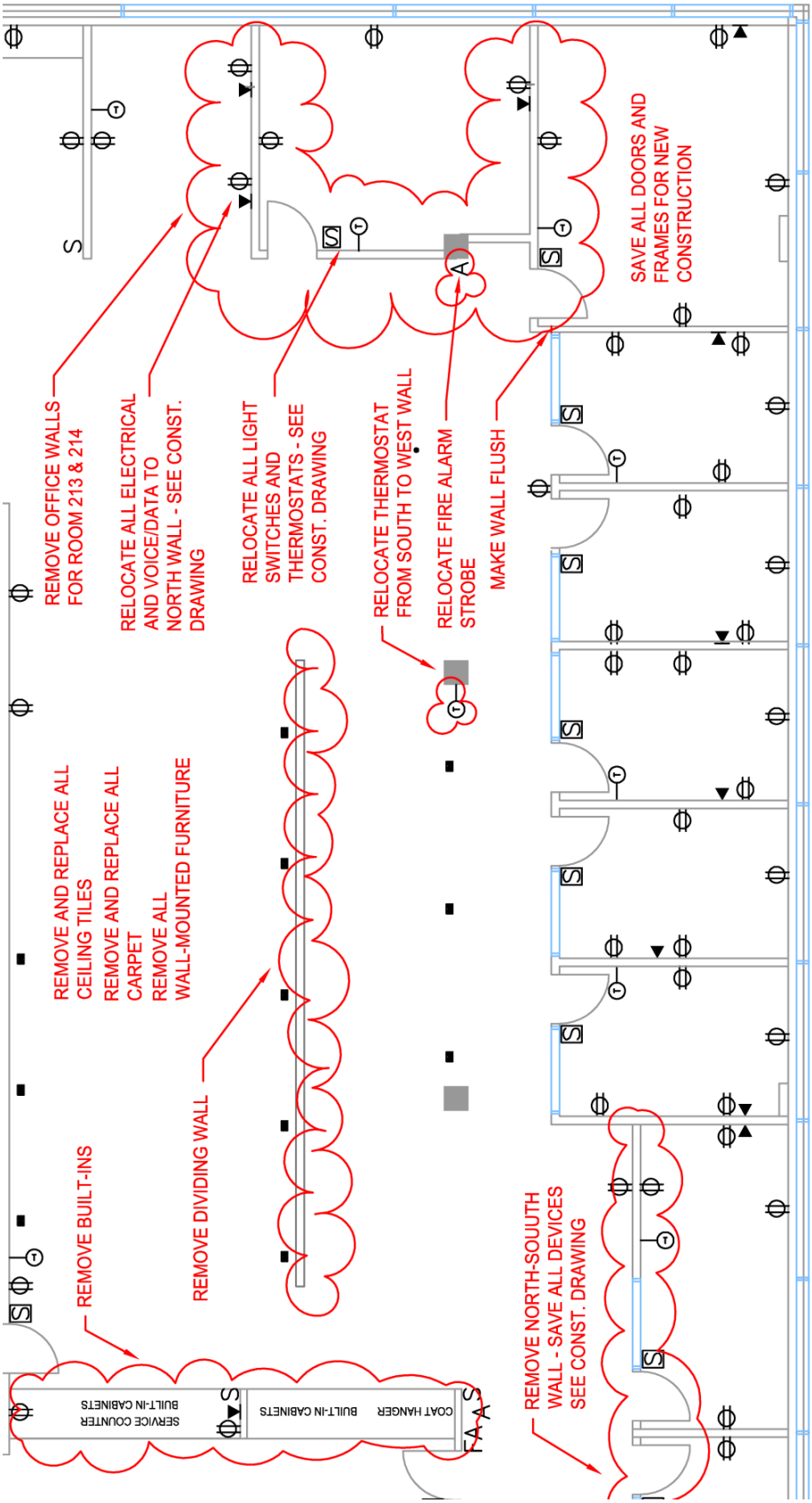

Sample demolition plan.

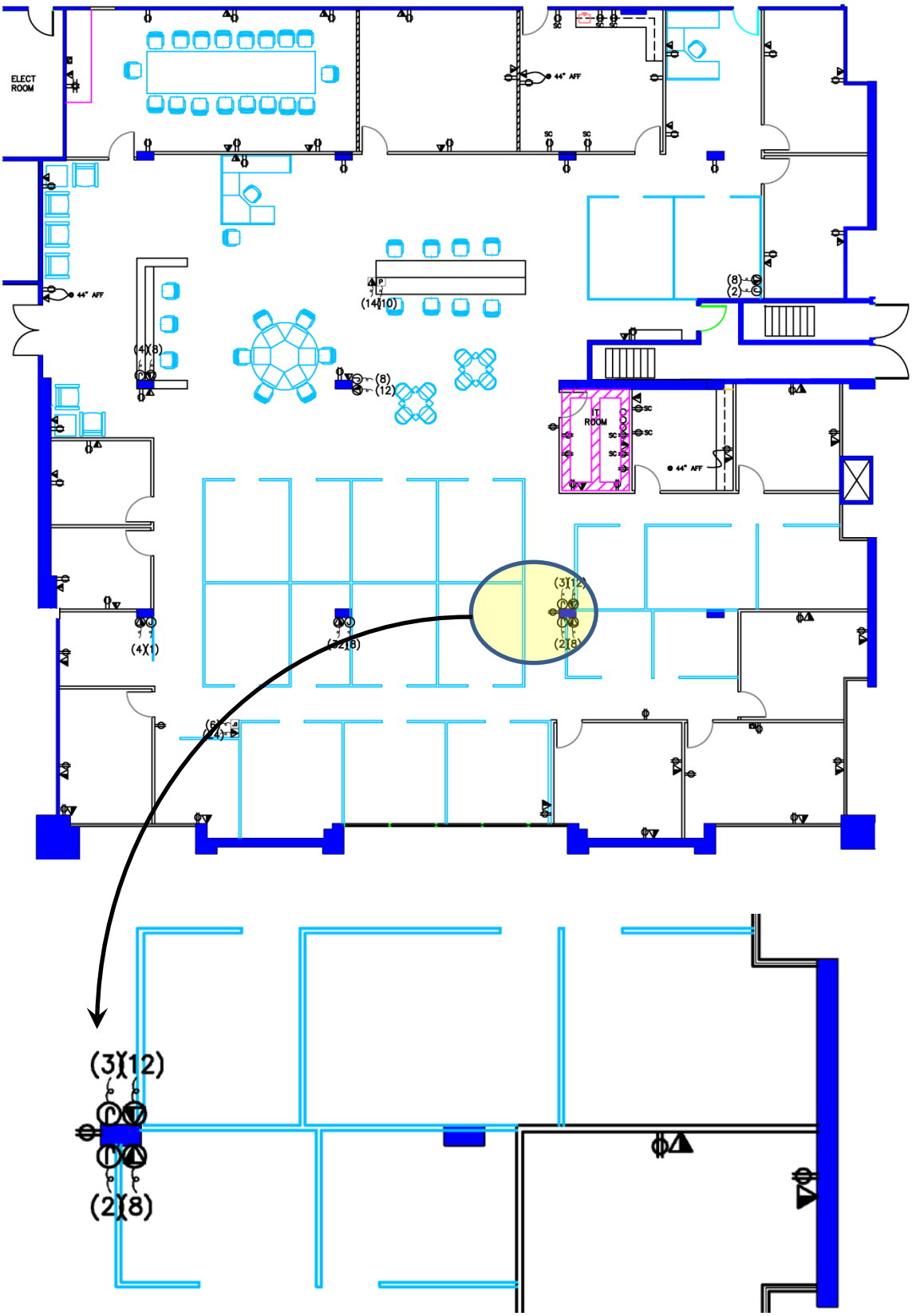

Sample floor plan and enlargement.

Sample Reflected ceiling diagram showing light fixture placement.

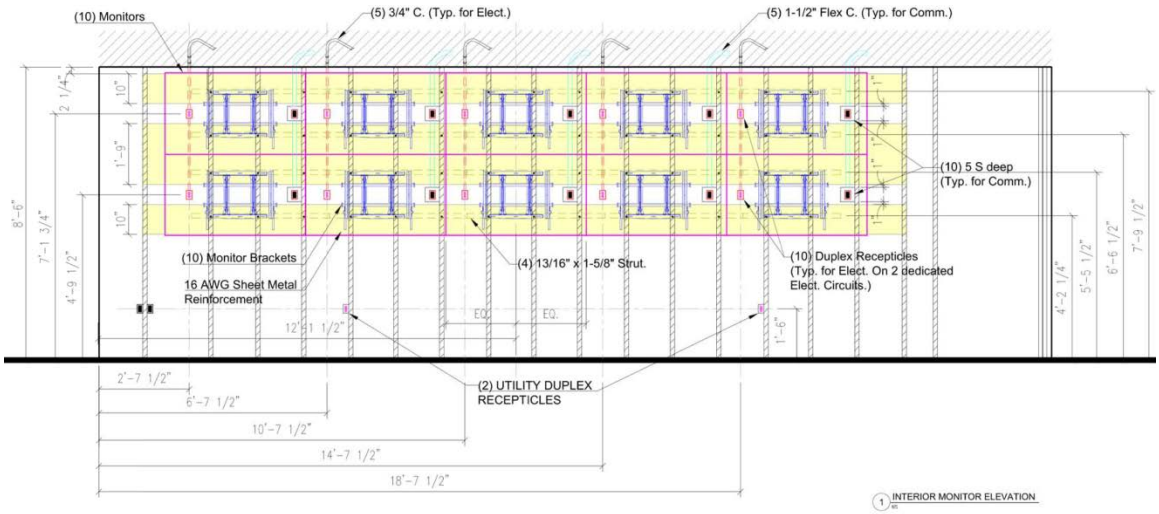

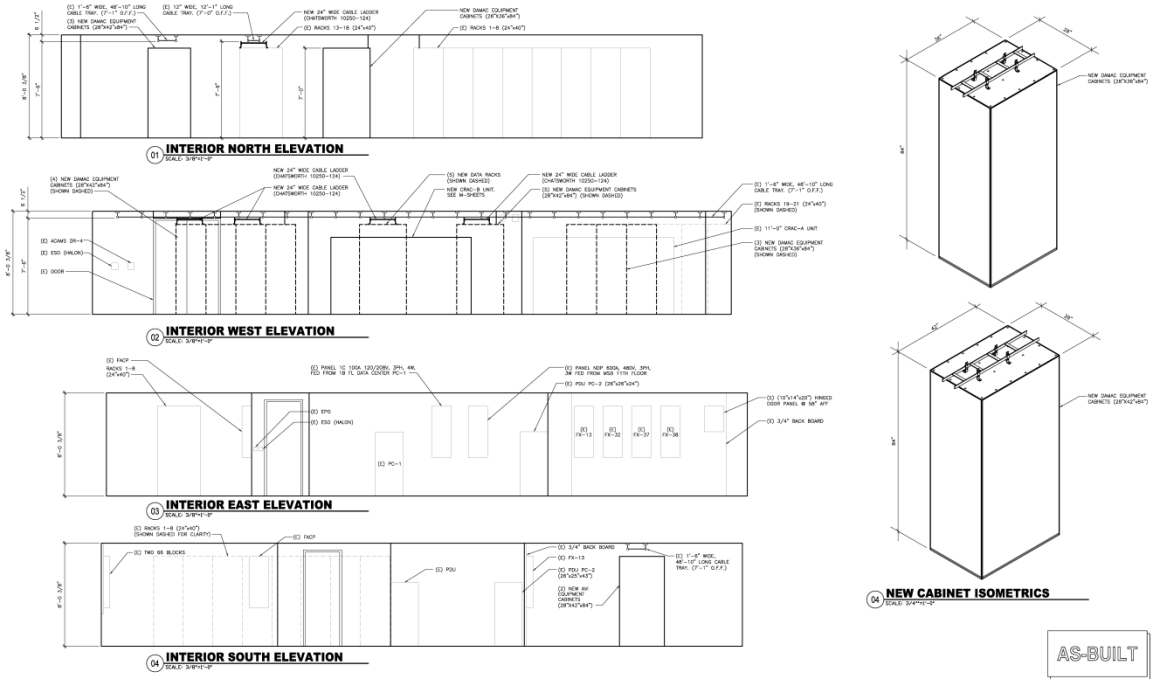

Sample IT Room interior wall elevation diagrams.

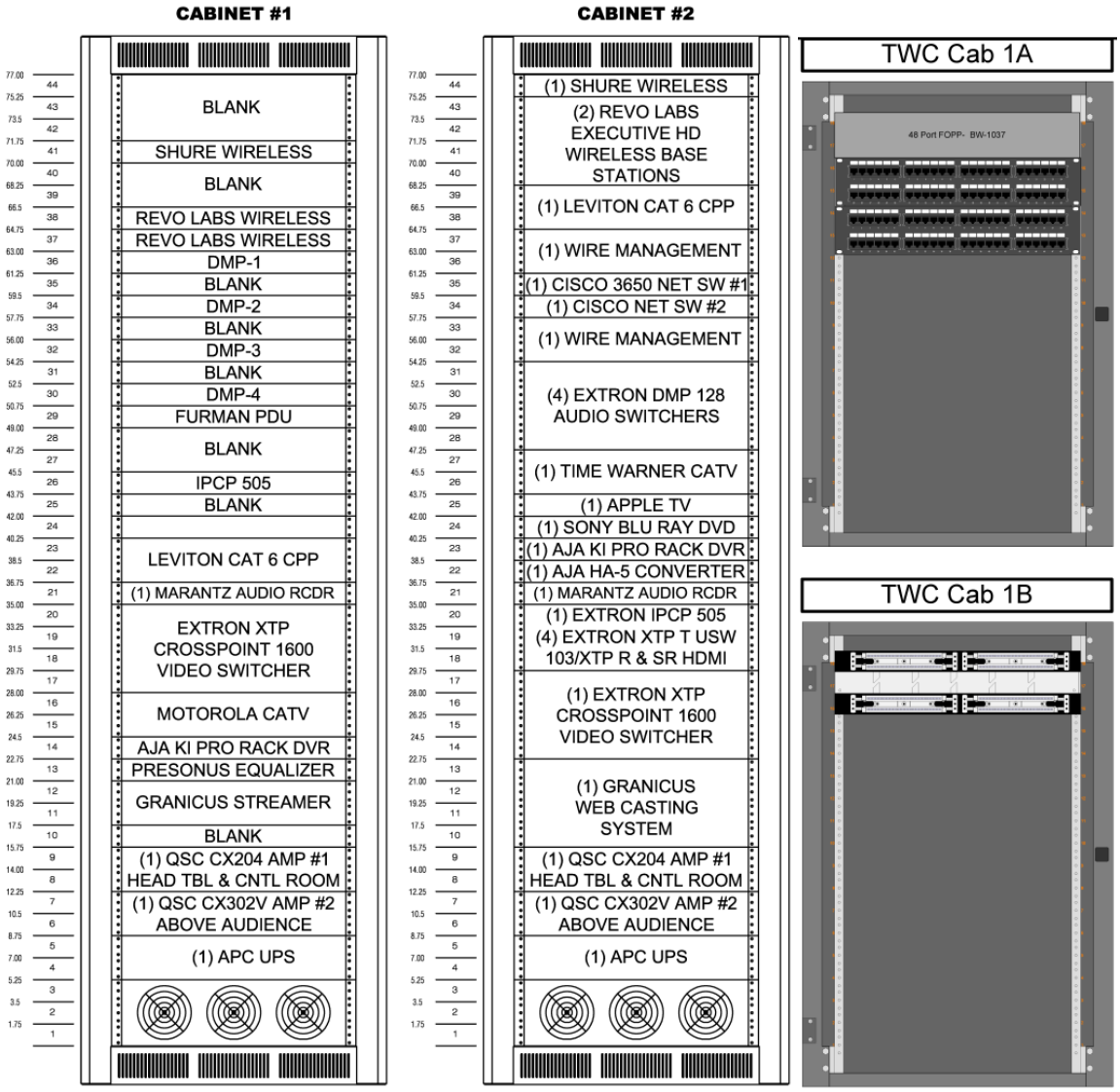

Sample equipment cabinet elevation diagrams.

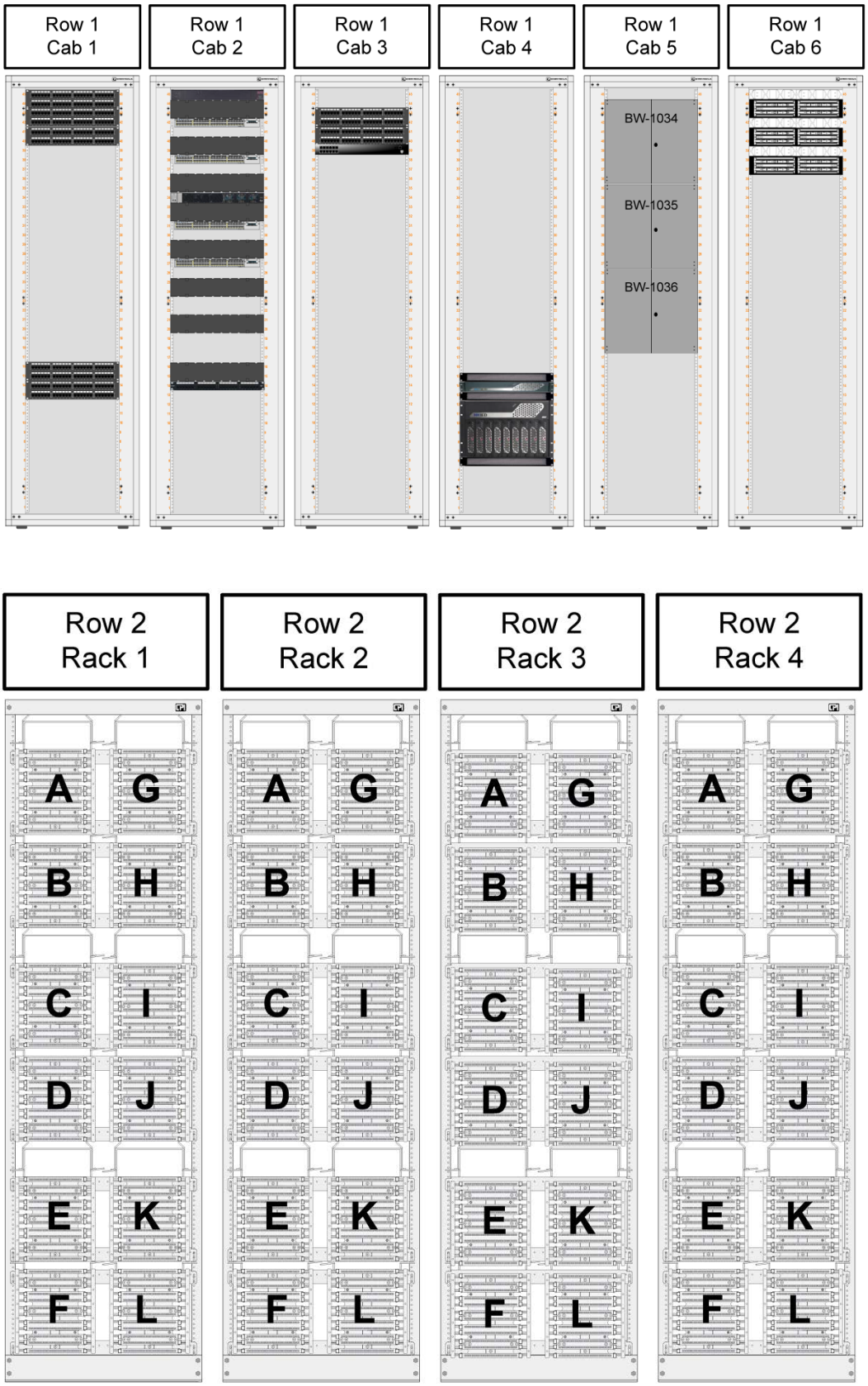

Sample main distribution frame diagram.

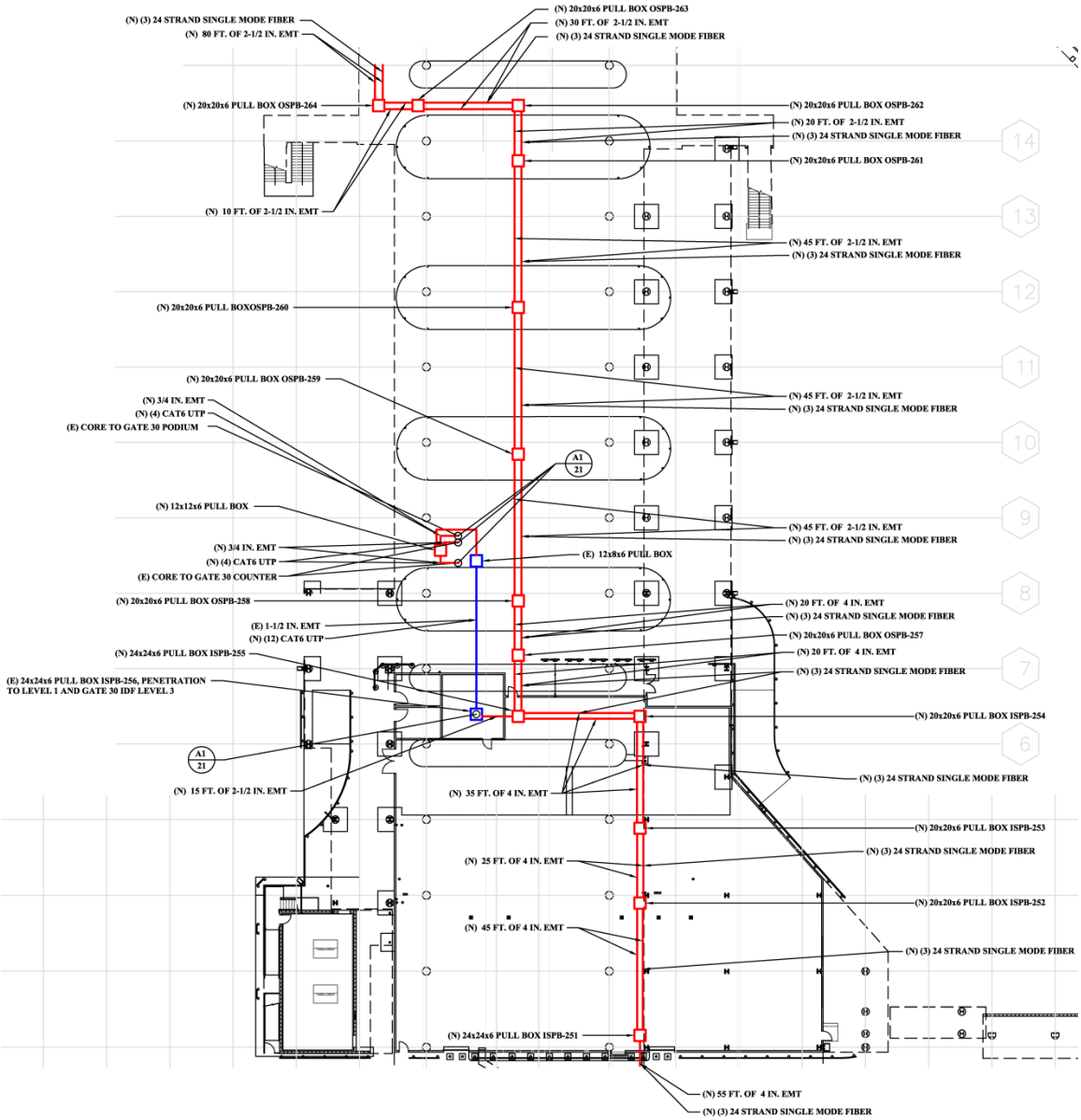

Sample conduit and junction box pathway diagram.

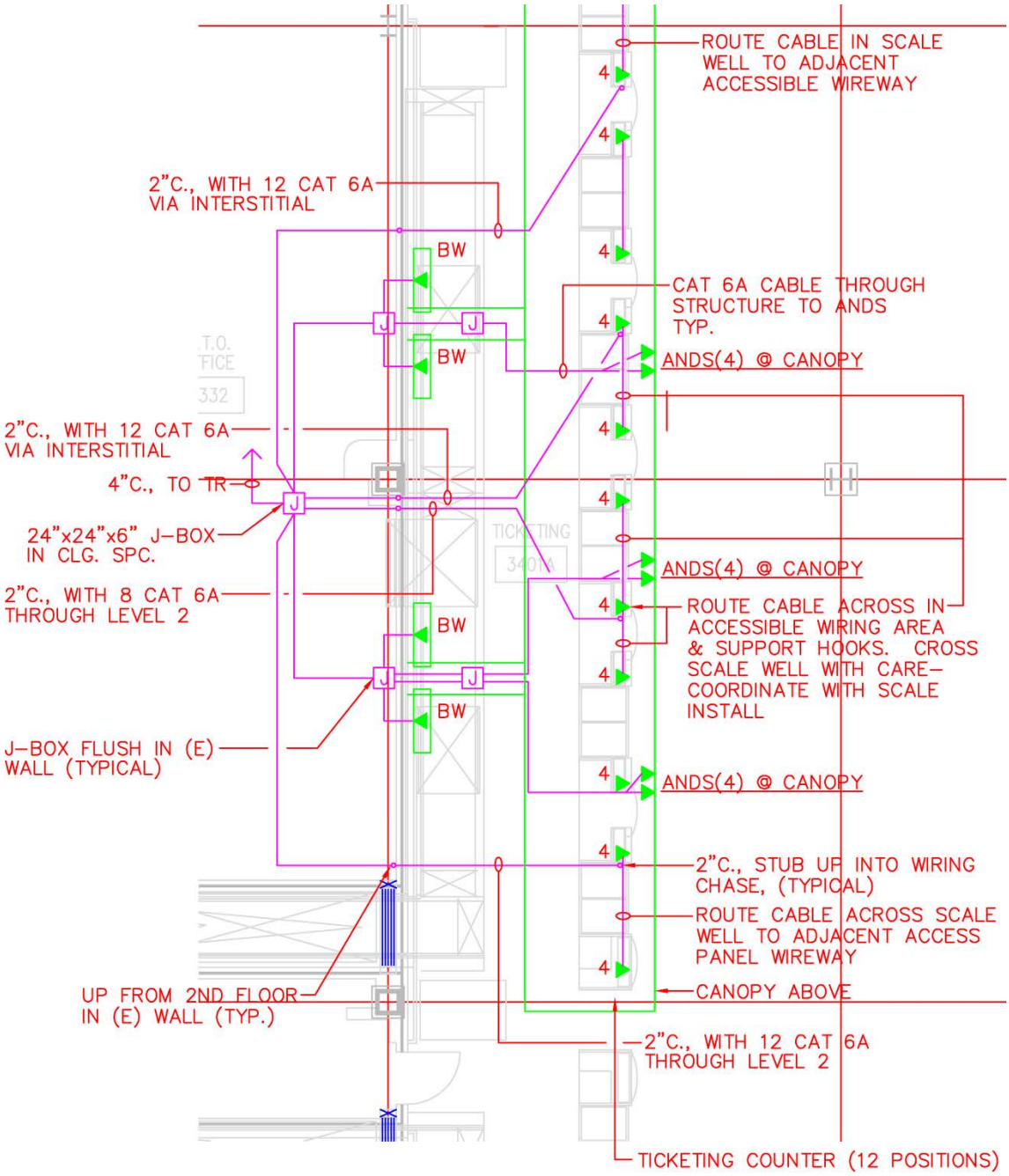

Sample horizontal distribution diagram.

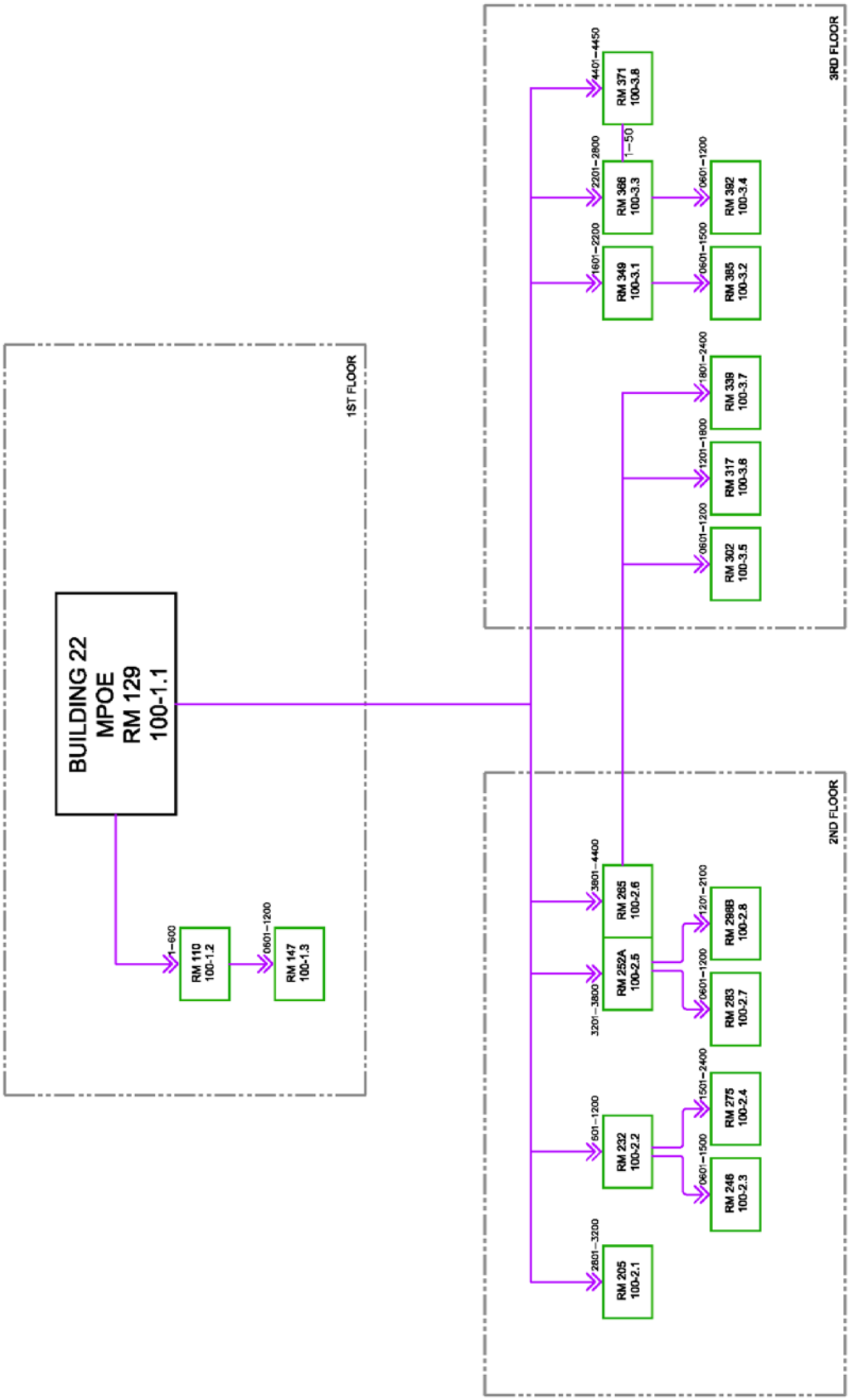

Sample copper backbone riser diagram.

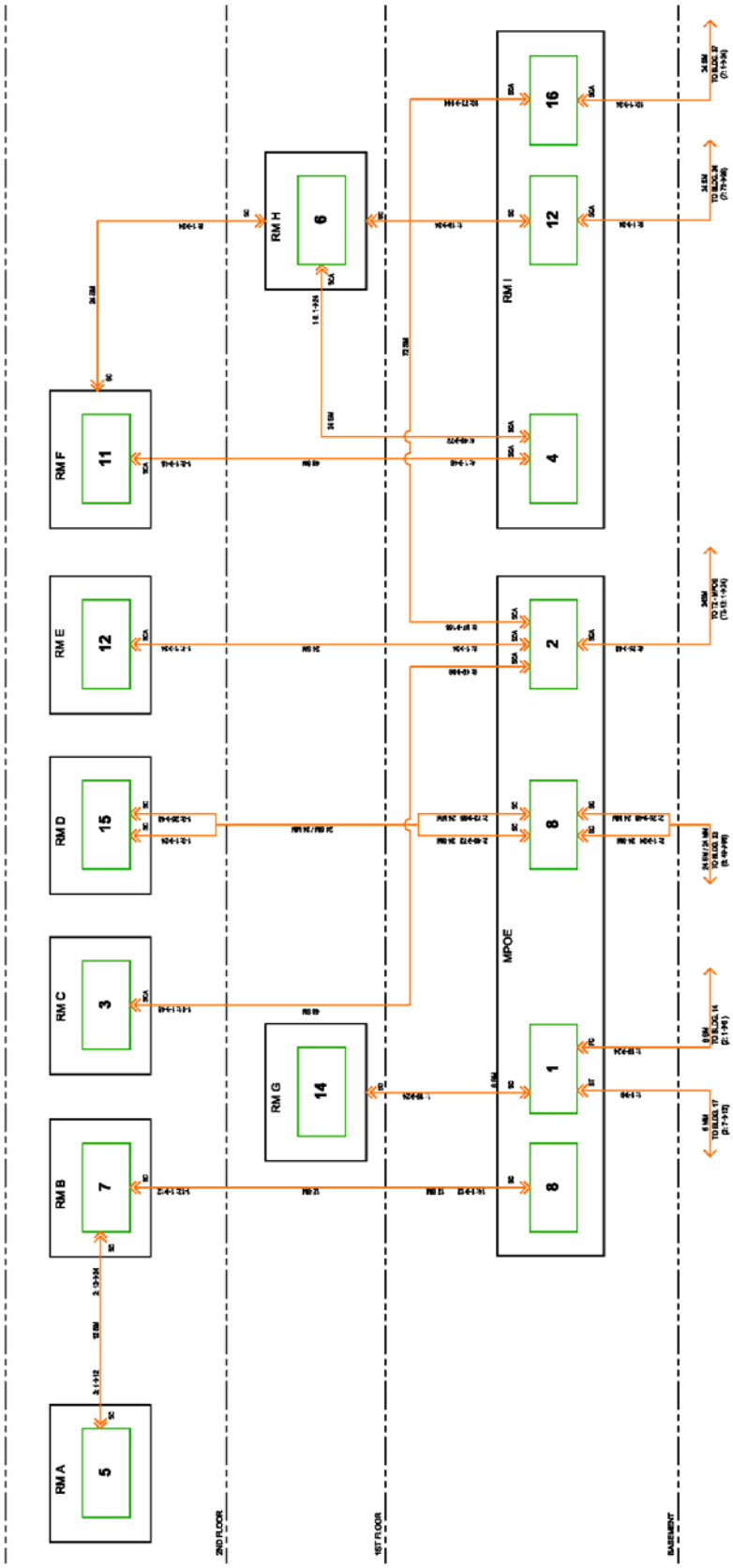

Sample fiber optic backbone riser diagram.

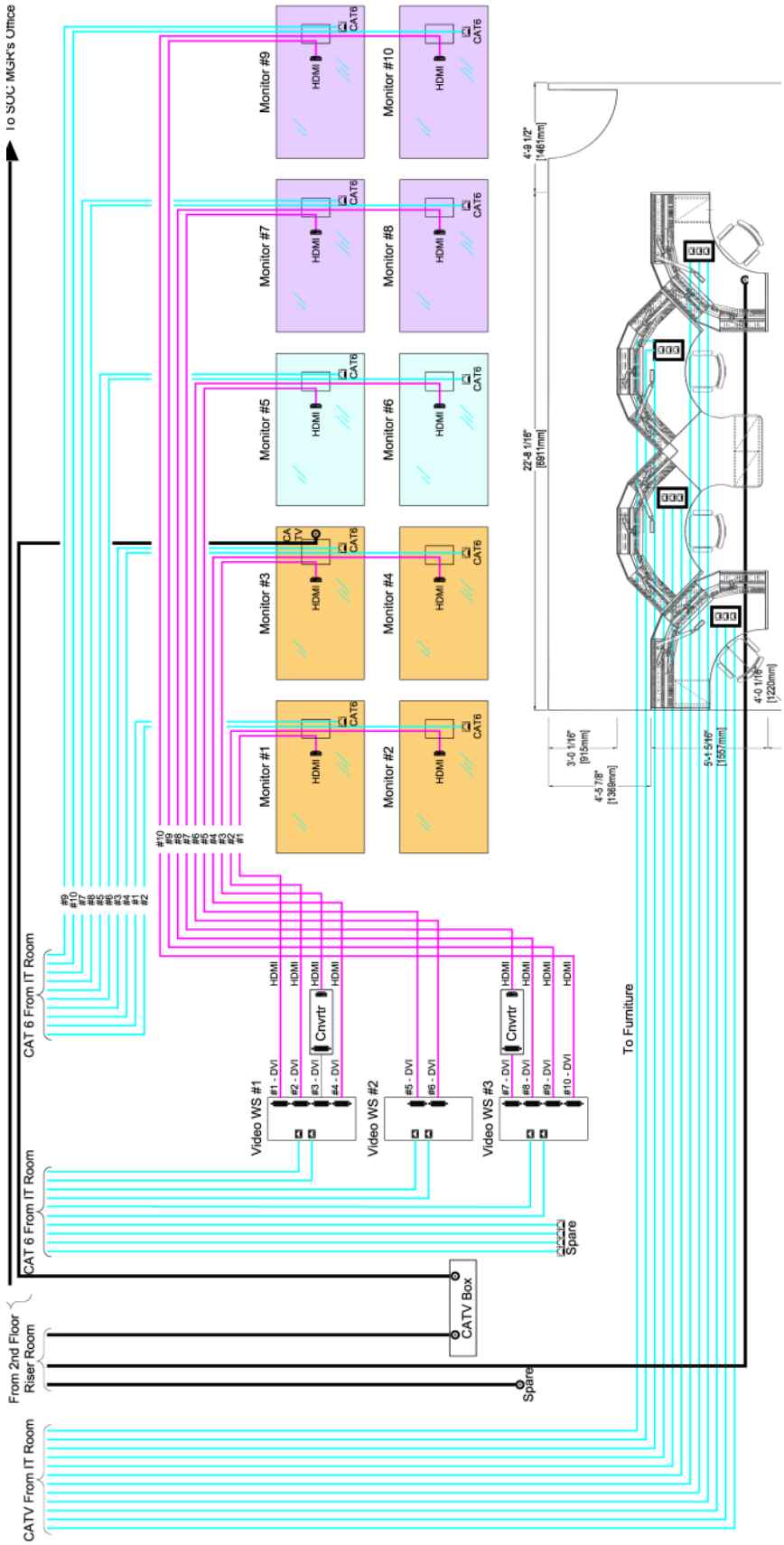

Sample Video wall wiring (interconnect) diagram.

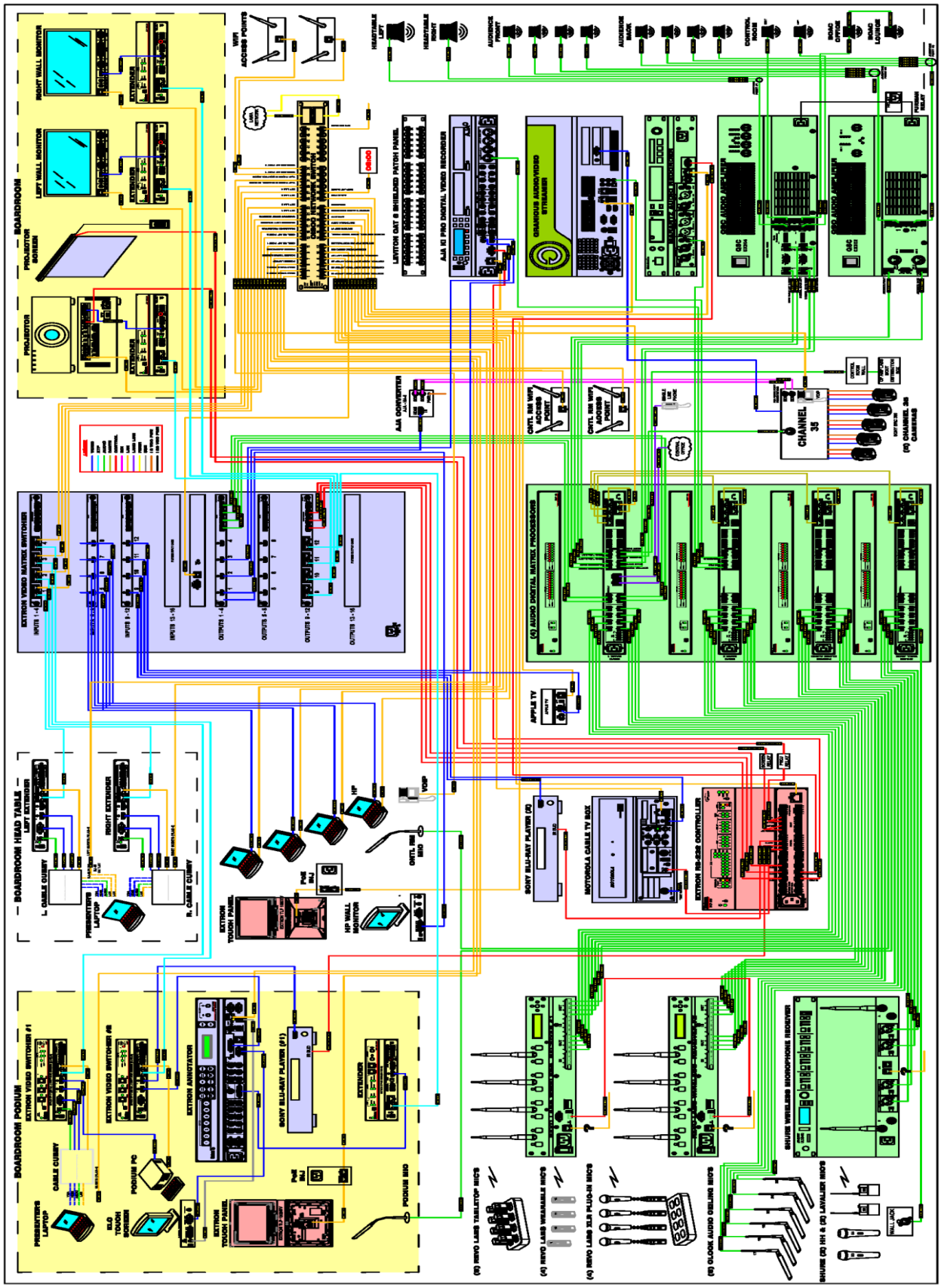

Sample AS-BUILT wiring (interconnect) System diagram.

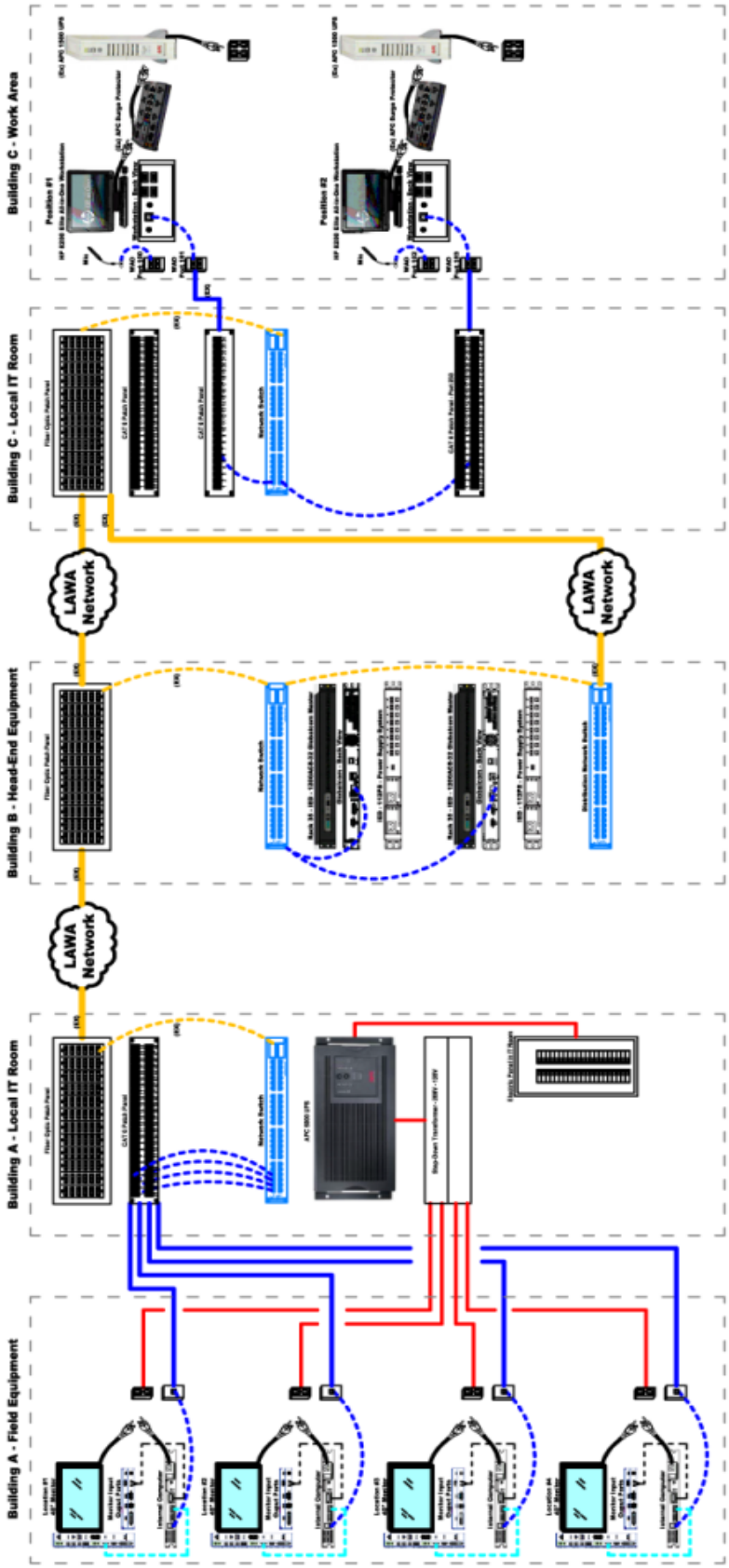

Sample System singleline diagram.

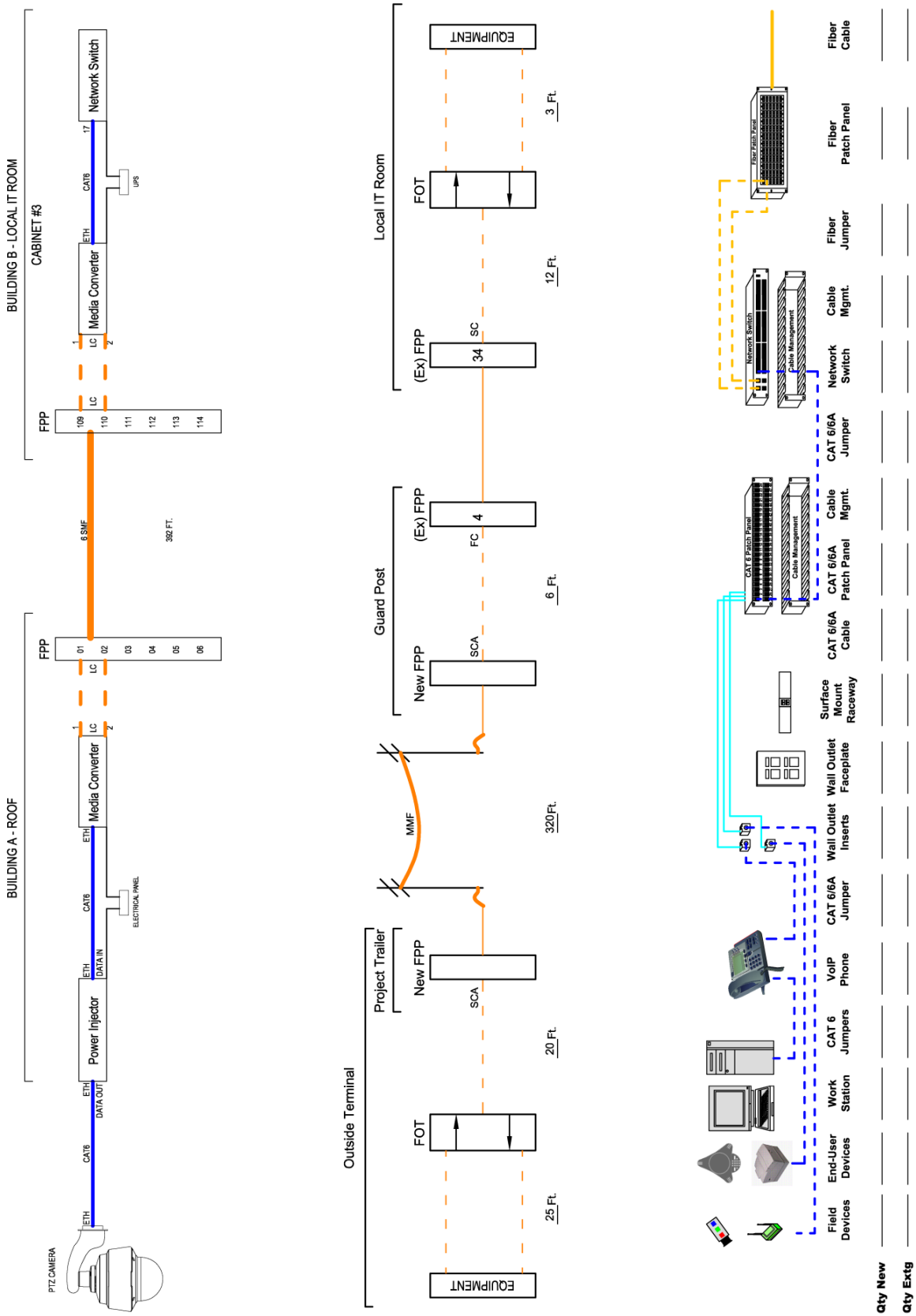

Sample Infrastructure singleline diagrams.

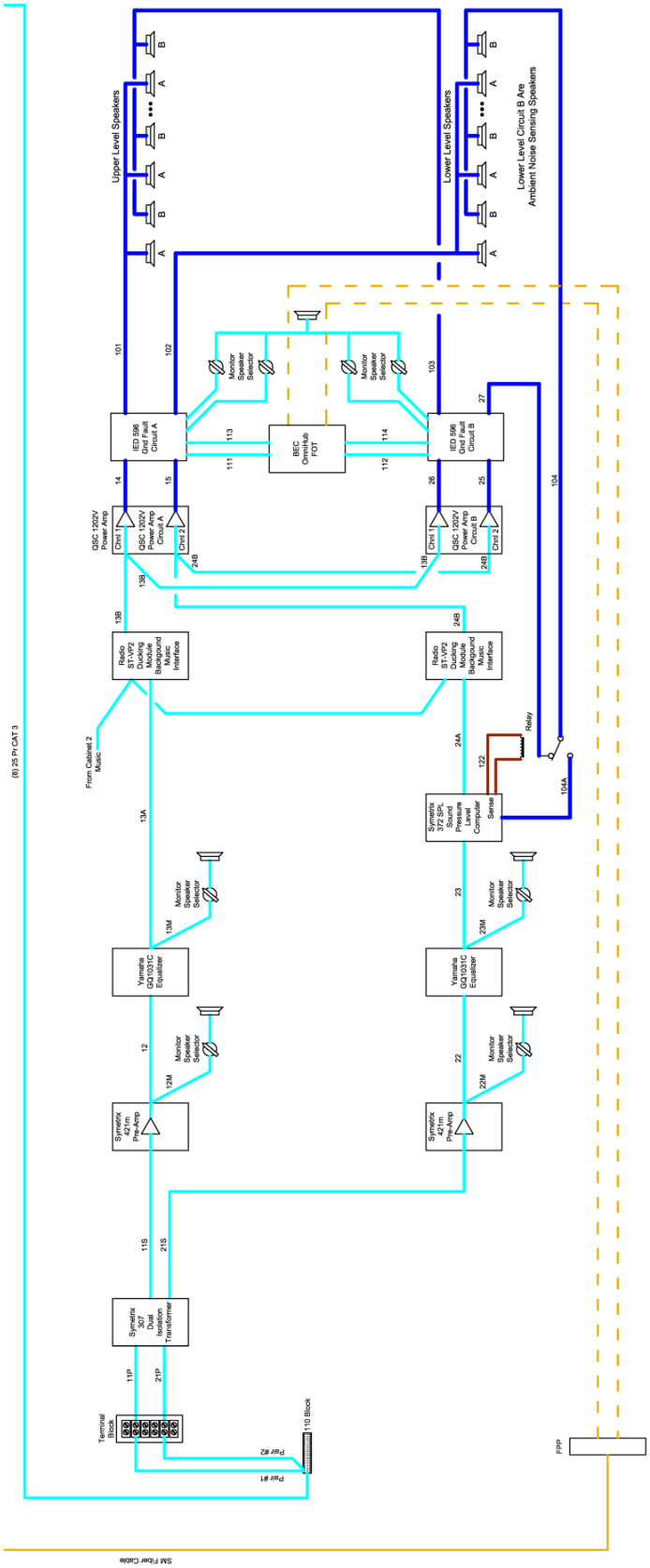

Sample analog Paging System singleline diagram.

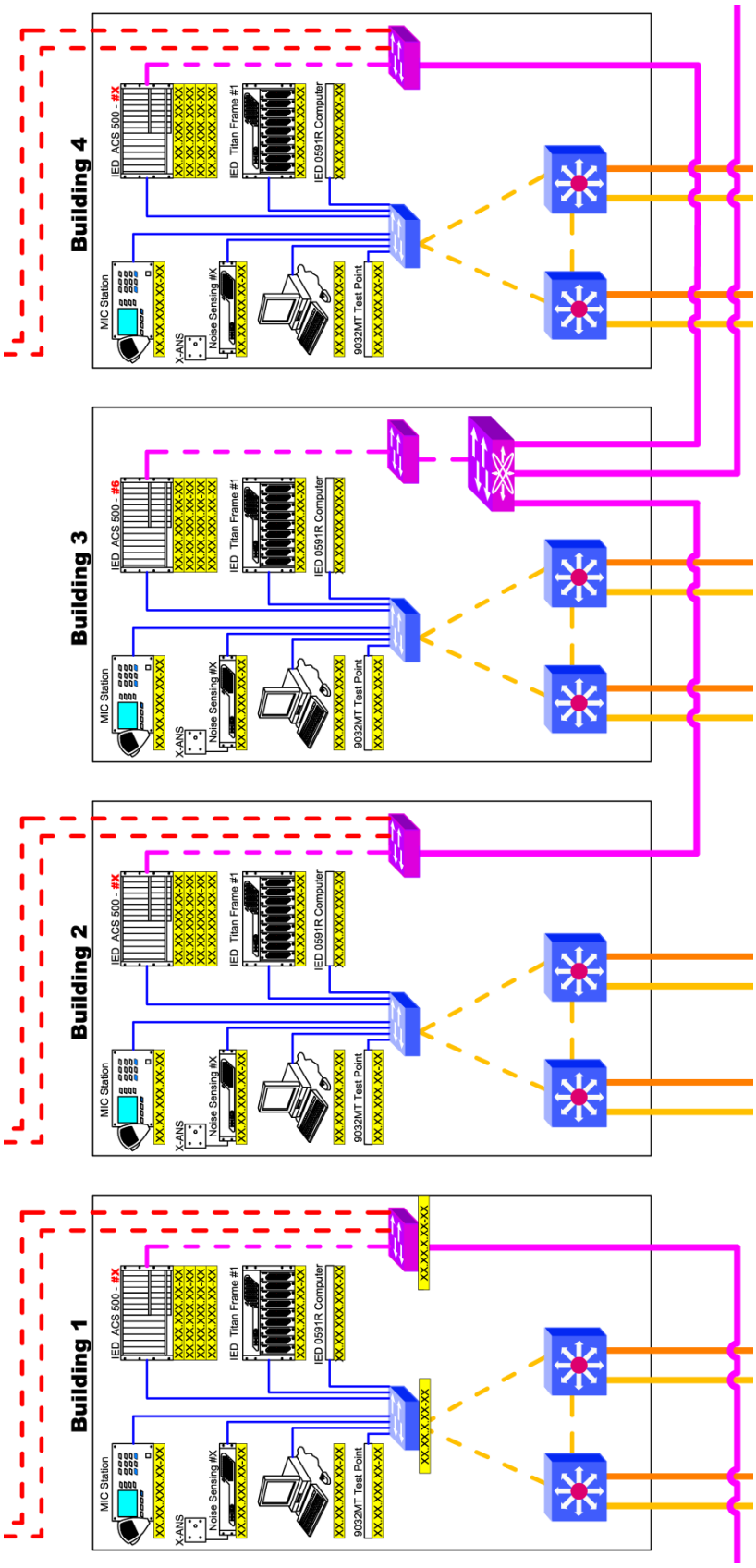

Sample digital Paging System singleline diagram.

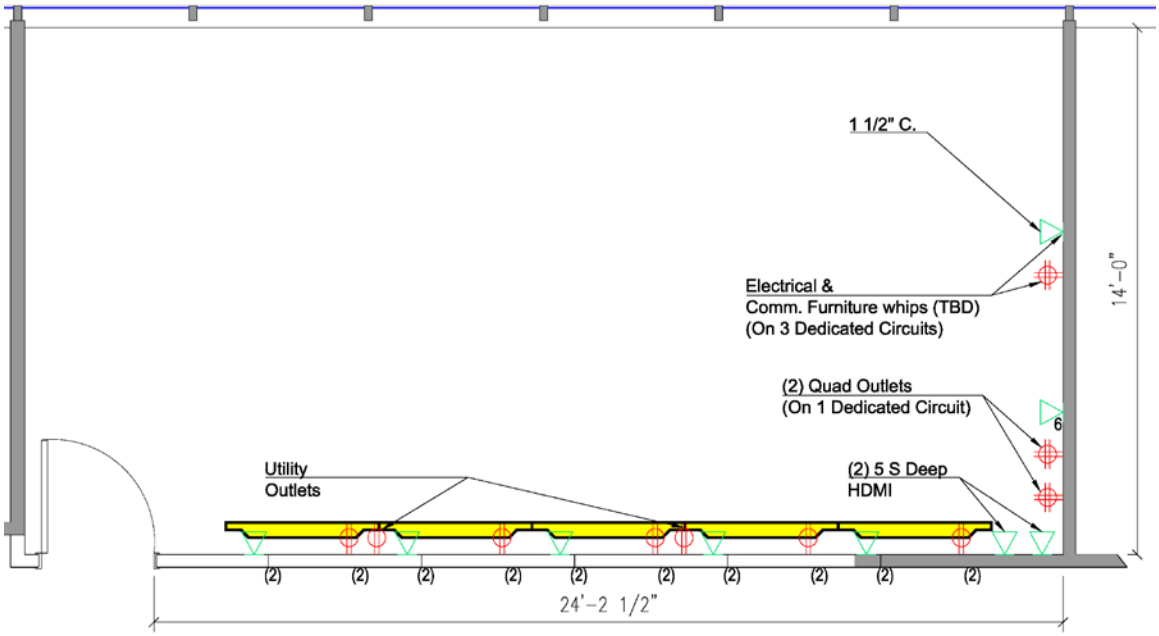

Sample video wall layout diagram.

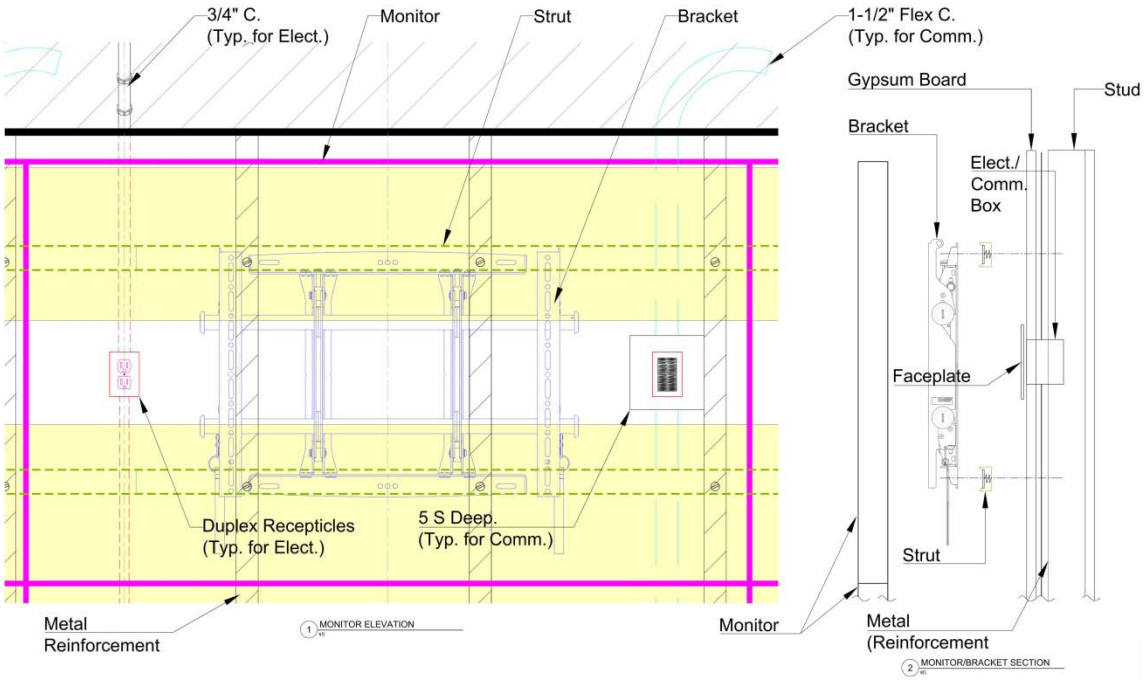

Sample CATV monitor installation layout diagram.

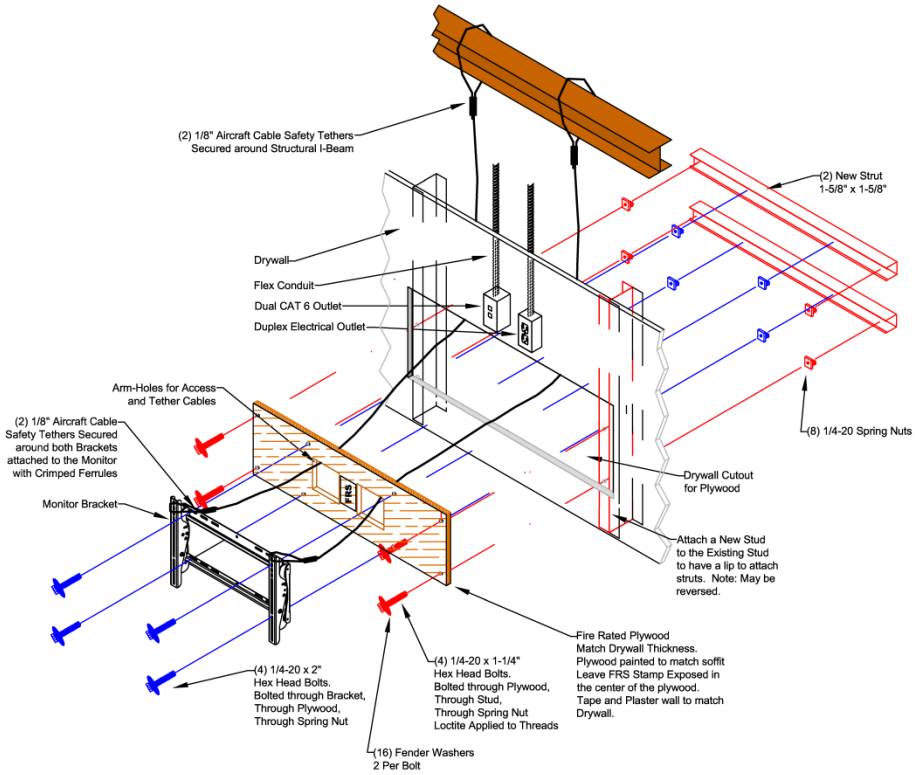

Sample single video monitor installation detail diagram.

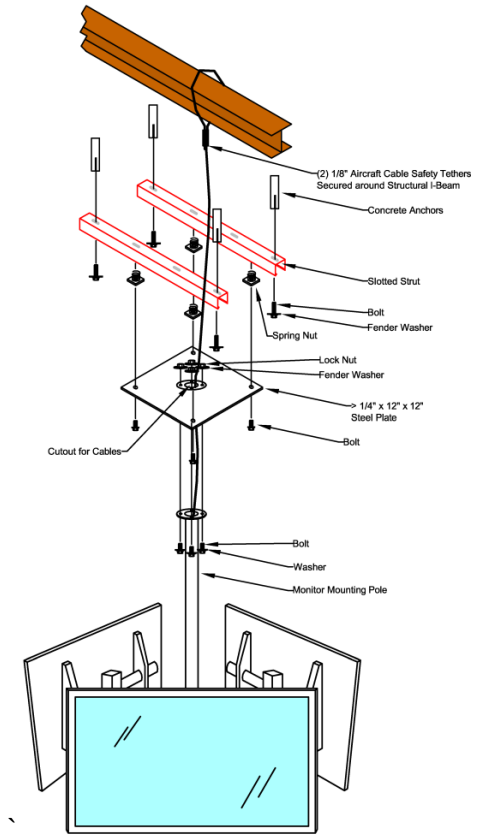

Sample triple video monitor installation detail diagram.

OTDR Report

General Information

Filename:		Cable ID:	CORNING CABLE
Test date:	8/5/2015 12:00:00 /	Fiber ID:	096
Test time:	4:25 AM (GMT-08:00)	Customer:	LAWA
Job ID:		Company:	
Comments:	Test of 216 fiber from		

Location A

Location:	
Operator:	
Unit's model:	OV-MINI-MDSD-BK
Unit's s/n:	534148
Calibration date:	5/26/2014

Location B

Location:	
Operator:	
Unit's model:	
Unit's s/n:	
Calibration date:	

Results

Span length:	12848.9734 ft	Average splice loss:	
Span loss:	2.138 dB	Maximum splice loss:	
Average loss:	0.000 dB/ft	Span ORL:	< 21.97 dB

Test Parameters

Wavelength:	1310 nm (9 µm)	Duration:	15 s
Range:	16404.1995 ft	High resolution:	No
Pulse:	100 ns	Resolution:	1.047 ft

Test Settings

IOR:	1.467700	Splice loss threshold:	0.050 dB
Backscatter:	-79.44 dB	Reflectance threshold:	-72.0 dB
Helix factor:	0.00 %	End-of-fiber threshold:	3.000 dB

Markers Information

A:	568.5757 ft,	19.711 dB	B:	12722.2741 ft,	17.644 dB
a:	283.7643 ft,	19.755 dB	b:	13007.0855 ft,	18.477 dB
B-A:	12153.6984 ft,	2.070 dB			

Manual Measurements

4 points event loss:	-0.929 dB	A-B LSA attenuation:	0.402 dB/km
A-B LSA loss:	1.487 dB	3 points reflectance:	*****
2 points section attenuation:	0.558 dB/km	A-B ORL:	36.36 dB

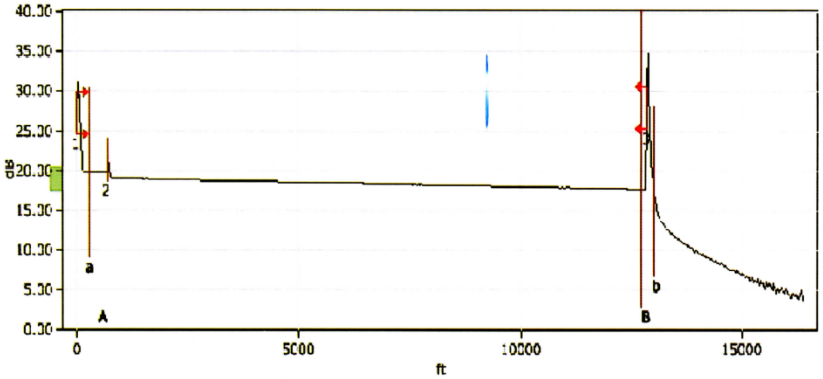

Event Table

Type	No	Location/Length (ft)	Loss (dB)	Reflection (dB)	Attenuation (dB / km)	Cumul. (dB)
Launch Level	1	0.0000		-35.7		0.000
Section		676.4271	0.114		0.551	0.114
Reflective	2	676.4271	0.640	-55.7		0.754
Section		12172.5462	1.385		0.373	2.138
Reflective	3	12848.9733		-18.3		2.138

Sample OTDR fiber test tracing.

LINKWARE
CABLE TEST MANAGEMENT SOFTWARE

Cable ID: 103-R8-C-09

Test Summary: PASS

Date / Time: 01/16/2013 12:06:04am
Headroom: 2.8 dB (NEXT 36-45)
Test Limit: TIA Cat 6 Perm. Link
Cable Type: Cat 6 UTP

Operator:
Software Version: 2.6300
Limits Version: 1.8100
NVP: 69.0%

Model: DTX-1800
Main S/N: 2118105
Remote S/N: 2118106
Main Adapter: DTX-PLA002
Remote Adapter: DTX-PLA002

Wire Map (T568A)
PASS

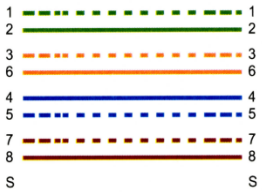

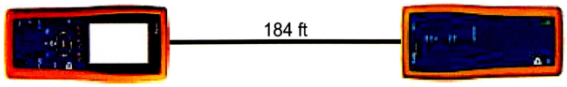

Length (ft), Limit 295	[Pair 78]	184
Prop. Delay (ns), Limit 498		281
Delay Skew (ns), Limit 44		10
Resistance (ohms)	[Pair 45]	8.9
Insertion Loss Margin (dB)	[Pair 45]	10.2
Frequency (MHz)	[Pair 45]	250.0
Limit (dB)	[Pair 45]	31.1

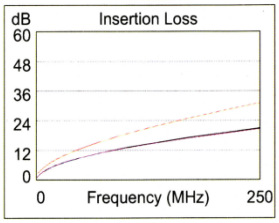

	Worst Case Margin		Worst Case Value	
PASS	MAIN	SR	MAIN	SR
Worst Pair	36-45	12-36	36-45	36-45
NEXT (dB)	2.8	4.8	2.8	6.0
Freq. (MHz)	204.5	161.0	204.5	241.0
Limit (dB)	36.8	38.5	36.8	35.6
Worst Pair	36	36	36	36
PS NEXT (dB)	4.0	4.7	4.5	4.7
Freq. (MHz)	204.5	241.5	241.5	241.5
Limit (dB)	34.2	33.0	33.0	33.0

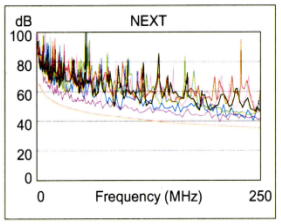

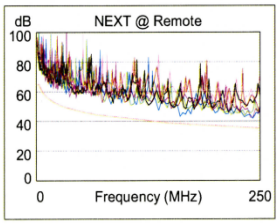

PASS	MAIN	SR	MAIN	SR
Worst Pair	45-36	36-45	36-45	36-45
ACR-F (dB)	11.7	11.5	11.9	11.5
Freq. (MHz)	246.5	245.0	249.5	247.0
Limit (dB)	16.4	16.4	16.2	16.3
Worst Pair	45	45	45	36
PS ACR-F (dB)	12.4	12.5	13.2	13.0
Freq. (MHz)	114.5	117.0	239.0	245.5
Limit (dB)	20.0	19.8	13.6	13.4

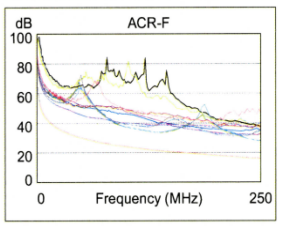

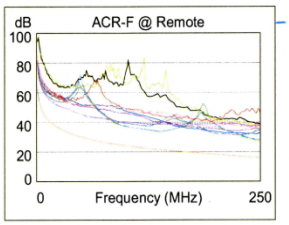

N/A	MAIN	SR	MAIN	SR
Worst Pair	36-45	12-36	12-36	36-45
ACR-N (dB)	6.8	10.6	14.9	16.0
Freq. (MHz)	19.0	16.1	241.5	241.0
Limit (dB)	45.7	47.5	5.1	5.1
Worst Pair	36	12	36	36
PS ACR-N (dB)	8.3	11.2	14.8	15.0
Freq. (MHz)	19.1	16.5	242.0	241.5
Limit (dB)	43.3	44.9	2.4	2.5

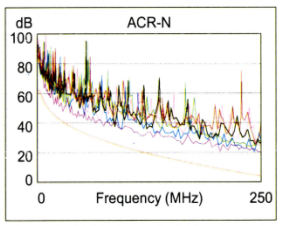

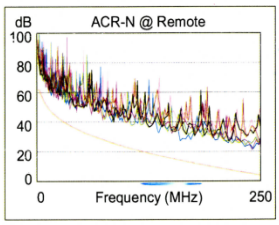

PASS	MAIN	SR	MAIN	SR
Worst Pair	45	45	12	36
RL (dB)	8.1	6.4	10.1	11.3
Freq. (MHz)	7.3	10.5	135.0	228.5
Limit (dB)	21.0	20.9	12.7	10.4

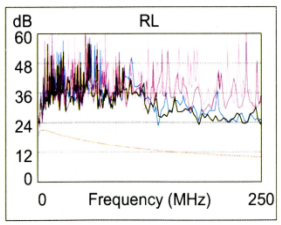

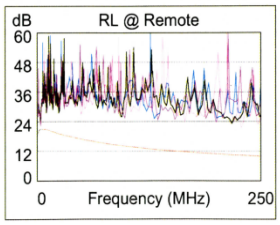

Compliant Network Standards:

10BASE-T	100BASE-TX	100BASE-T4
1000BASE-T	ATM-25	ATM-51
ATM-155	100VG-AnyLan	TR-4
TR-16 Active	TR-16 Passive	

LinkWare Version 6.2

Project: LAWA

FLUKE networks

Sample CAT 6 horizontal cable permanent link test diagram.

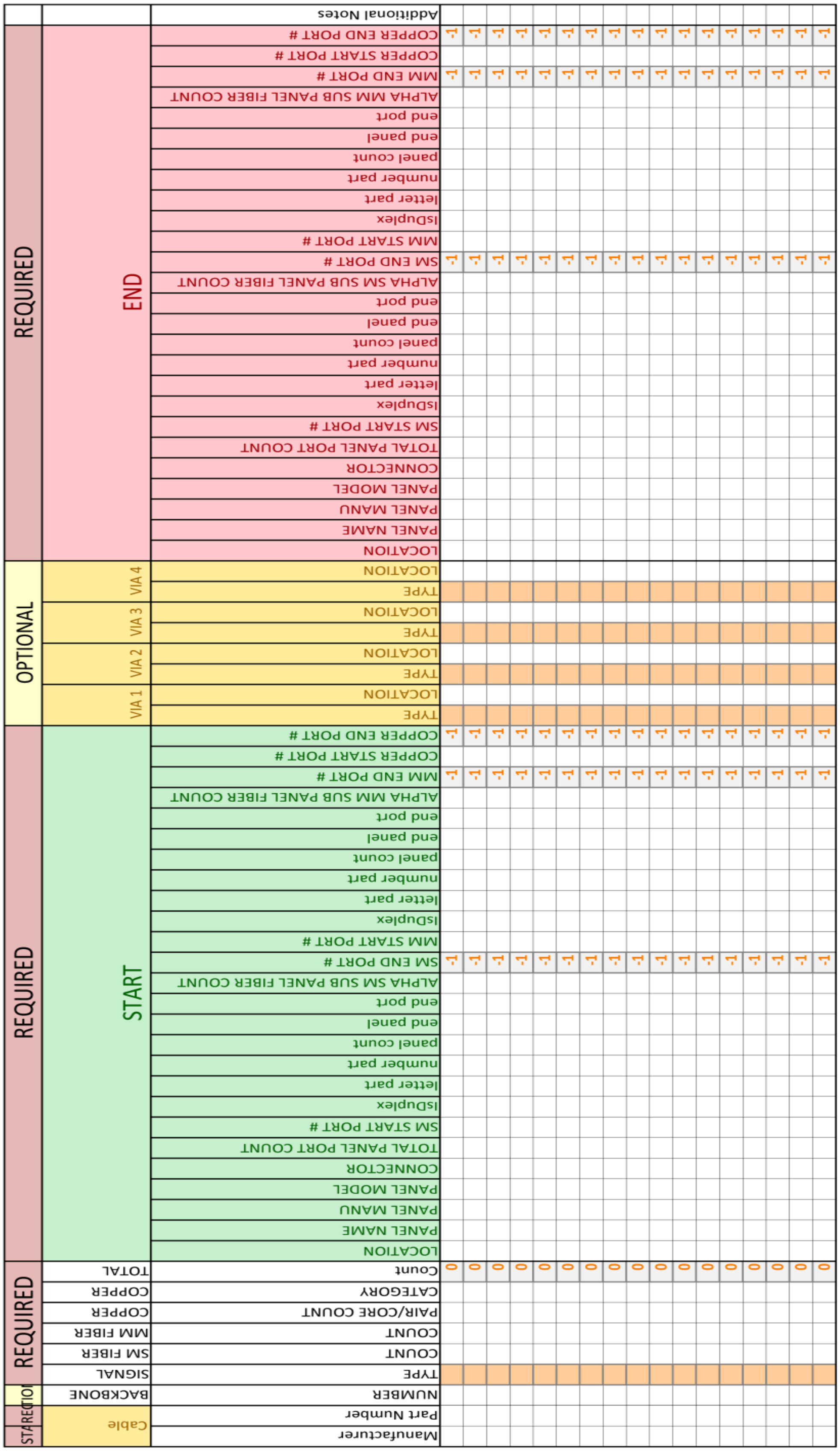

		Additional Notes																	
REQUIRED	END	COPPER END PORT #	-1	-1	-1	-1	-1	-1	-1	-1	-1	-1	-1	-1	-1	-1	-1	-1	-1
		COPPER START PORT #																	
		MM END PORT #	-1	-1	-1	-1	-1	-1	-1	-1	-1	-1	-1	-1	-1	-1	-1	-1	-1
		ALPHA MM SUB PANEL FIBER COUNT																	
		end port																	
		end panel																	
		panel count																	
		number part																	
		letter part																	
		isDuplex																	
		MM START PORT #																	
		SM END PORT #	-1	-1	-1	-1	-1	-1	-1	-1	-1	-1	-1	-1	-1	-1	-1	-1	-1
		ALPHA SM SUB PANEL FIBER COUNT																	
		end port																	
		end panel																	
		panel count																	
		number part																	
		letter part																	
		isDuplex																	
		SM START PORT #																	
		TOTAL PANEL PORT COUNT																	
		CONNECTOR																	
		PANEL MODEL																	
		PANEL MANU																	
		PANEL NAME																	
		LOCATION																	
OPTIONAL	VIA 4	LOCATION																	
		TYPE																	
	VIA 3	LOCATION																	
		TYPE																	
	VIA 2	LOCATION																	
		TYPE																	
	VIA 1	LOCATION																	
		TYPE																	
REQUIRED	START	COPPER END PORT #	-1	-1	-1	-1	-1	-1	-1	-1	-1	-1	-1	-1	-1	-1	-1	-1	-1
		COPPER START PORT #																	
		MM END PORT #	-1	-1	-1	-1	-1	-1	-1	-1	-1	-1	-1	-1	-1	-1	-1	-1	-1
		ALPHA MM SUB PANEL FIBER COUNT																	
		end port																	
		end panel																	
		panel count																	
		number part																	
		letter part																	
		isDuplex																	
		MM START PORT #																	
		SM END PORT #	-1	-1	-1	-1	-1	-1	-1	-1	-1	-1	-1	-1	-1	-1	-1	-1	-1
		ALPHA SM SUB PANEL FIBER COUNT																	
		end port																	
		end panel																	
		panel count																	
		number part																	
		letter part																	
		isDuplex																	
		SM START PORT #																	
		TOTAL PANEL PORT COUNT																	
		CONNECTOR																	
		PANEL MODEL																	
		PANEL MANU																	
		PANEL NAME																	
		LOCATION																	
REQUIRED	TOTAL	Count	0	0	0	0	0	0	0	0	0	0	0	0	0	0	0	0	0
	COPPER	CATEGORY																	
	COPPER	PAIR/CORE COUNT																	
	MM FIBER	COUNT																	
	SM FIBER	COUNT																	
	SIGNAL	TYPE																	
TIOI	BACKBONE	NUMBER																	
REC	Cable	Part Number																	
STA		Manufacturer																	

Sample WireCAD cable backbone spreadsheet.

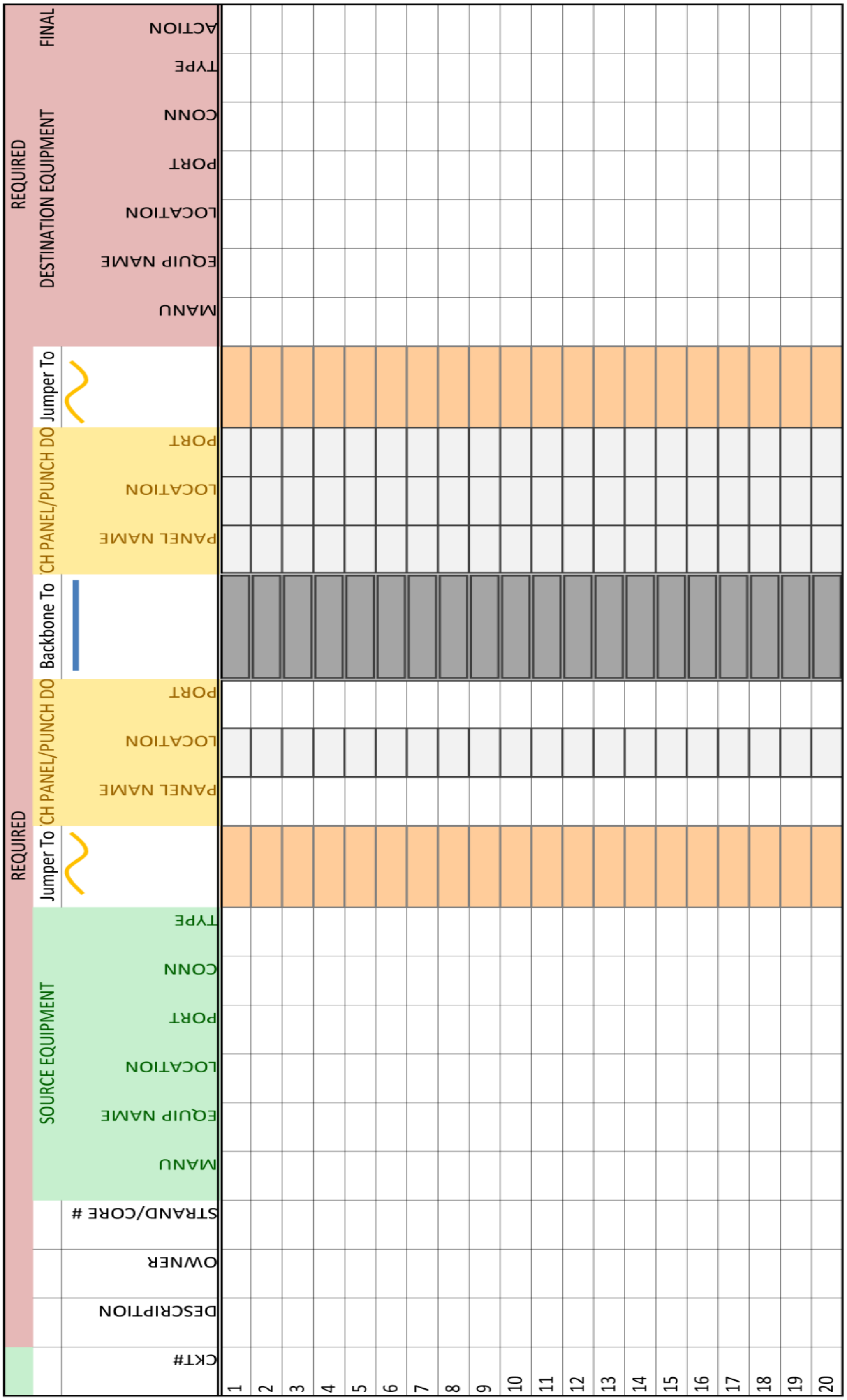

	REQUIRED																		REQUIRED						
				SOURCE EQUIPMENT						Jumper To	CH PANEL/PUNCH DO			Backbone To	CH PANEL/PUNCH DO			Jumper To	DESTINATION EQUIPMENT						FINAL
CKT#	DESCRIPTION	OWNER	STRAND/CORE #	MANU	EQUIP NAME	LOCATION	PORT	CONN	TYPE		PANEL NAME	LOCATION	PORT		PANEL NAME	LOCATION	PORT		MANU	EQUIP NAME	LOCATION	PORT	CONN	TYPE	ACTION
1																									
2																									
3																									
4																									
5																									
6																									
7																									
8																									
9																									
10																									
11																									
12																									
13																									
14																									
15																									
16																									
17																									
18																									
19																									
20																									

Sample WireCAD circuit diagram spreadsheet.

Project Name: _____ Contact Name: _____
Project Code: _____ Shipping Address: _____

Bill of Materials

Category	Phase	Manufacturer	Part Number	Description	Quantity On line	Quantity Spare	Quantity Total	Procure Date	Receive Date	Warranty Start Date	Warranty Stop Date	Comments
IT Room Cabinets												
TWC Cabinets												
Wall-Mount Cabinets												
Junction Boxes												
Conduits												
Connectors												
Wire												
Connectors												
Junction Boxes												
Cable Tray												
Cable Tray Supports												
Cable Tray Strut												
Threaded Rod												
Hardware												
Surface Mount												
Connectors												
Fiber Cable - Altos												
Fiber Cable - Freedm												
Fiber Cable - MIC												
Fiber Connectors												
Fiber Patch Panels												
Fiber Wireways												
Fiber Cable Management												
Fiber Splice Tray												
Fusion Splice Protectors												
Fiber Pigtails												
Fiber Jumpers												
Velcro Wire Ties												
Fiber Labels												
Copper Cable												
Copper Cable Connectors												
Work Area Outlets												
Work Area Outlets Inserts												
Plaster Rings												
Copper Patch Panels												
Cable Management												
Copper Jumpers												
Copper Labels												
Workstations												
Peripherals												
VoIP Telephones												
Network Switches												
Network GBIC SFP												
Velcro Wire Wraps												
Miscellaneous												

Sample Bill of Materials spreadsheet.

1.26. SENSITIVE SECURITY INFORMATION (SSI)

1.26.1. LAWA IT infrastructure documentation is considered as Sensitive Security Information (SSI).

1.26.2. SSI documentation shall have "Sensitive Security Information" listed in red letters on the top right hand corner and right margin as shown in the following titleblock. See Appendices for Federal Code of Regulations.

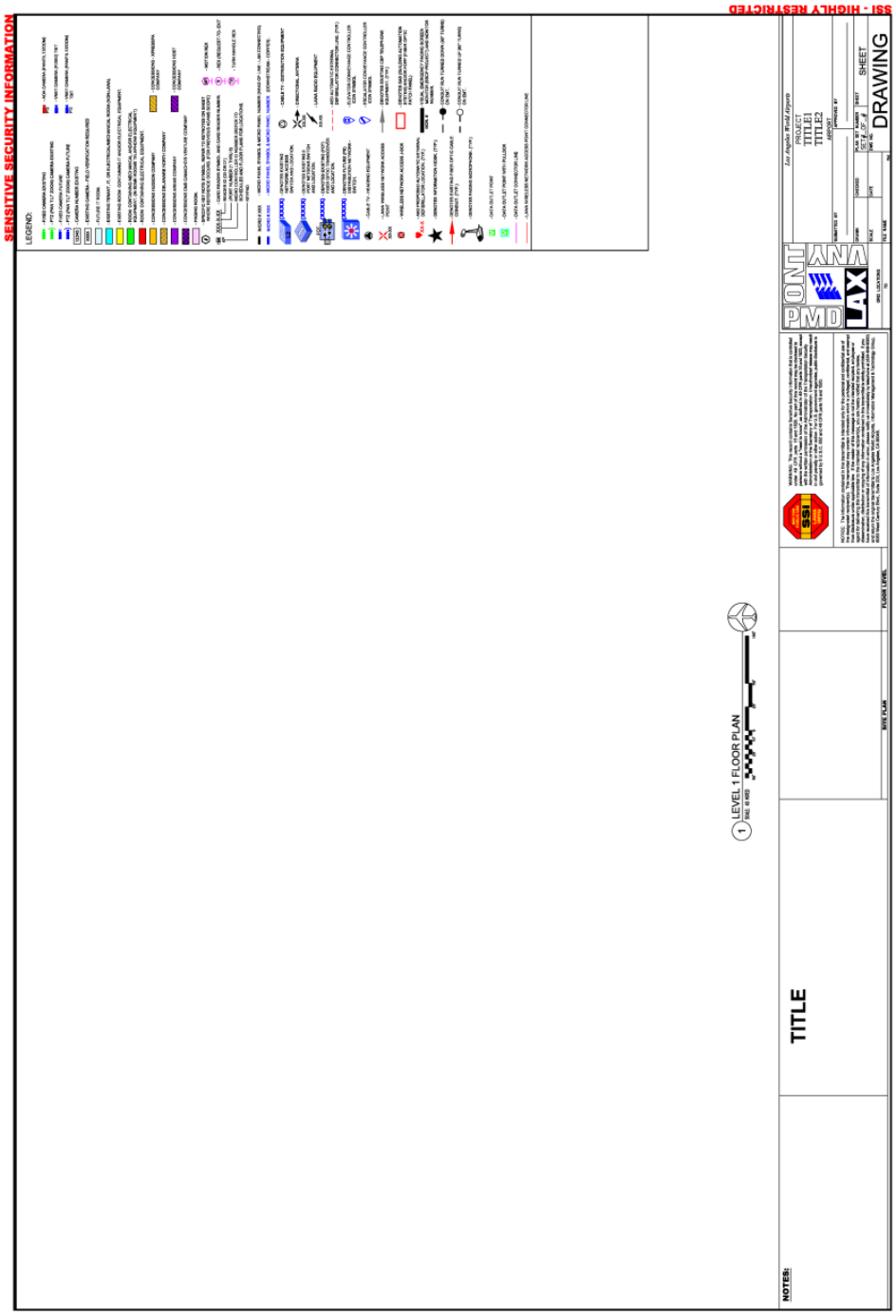

A sample Sensitive Security Information drawing Titleblock.

1.27. WIRECAD CABLE MANAGEMENT SYSTEM

1.27.1. WireCAD is used as LAWA's IT infrastructure cable management system. Designers need to specify that contractors obtain the required data in the specific format.

1.27.2. Contractor shall be required to use the WireCAD system spreadsheets for all fiber and copper backbone segments and circuits.

1.27.3. All associated costs shall be borne by the contractor.

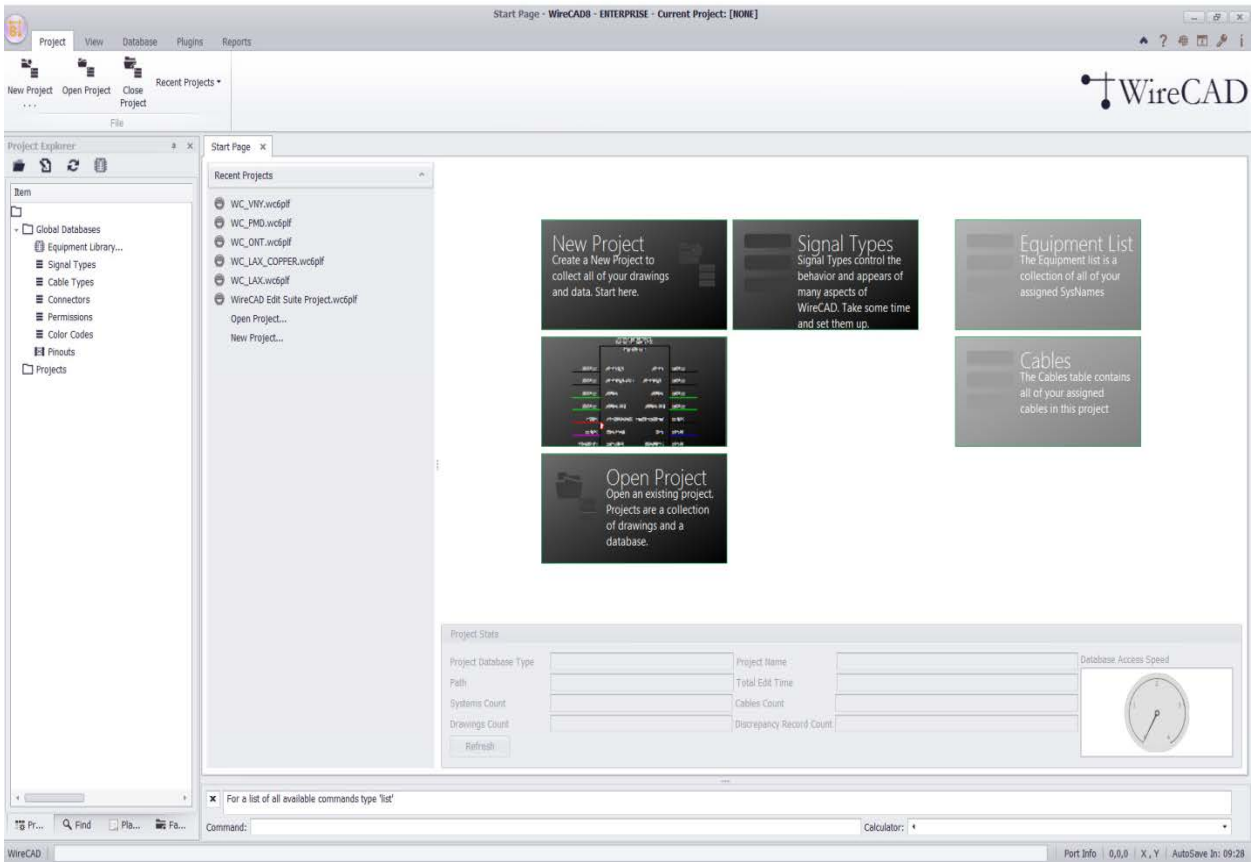

1.27.4. All backbone segments for fiber and copper cable information shall be entered into a **WireCAD backbone spreadsheet**. Contractor shall obtain the most recent spreadsheet from LAWA.

1.27.5. All backbone fiber and copper circuit information shall be entered into a WireCAD circuit spreadsheet. Contractor shall obtain the most recent spreadsheet from LAWA.

1.27.6. All backbone segment and circuit spreadsheets shall be verified by Holbrook Enterprises Inc. (HEI) for importability. Contractor shall bear all costs associated with WireCAD importability verification.

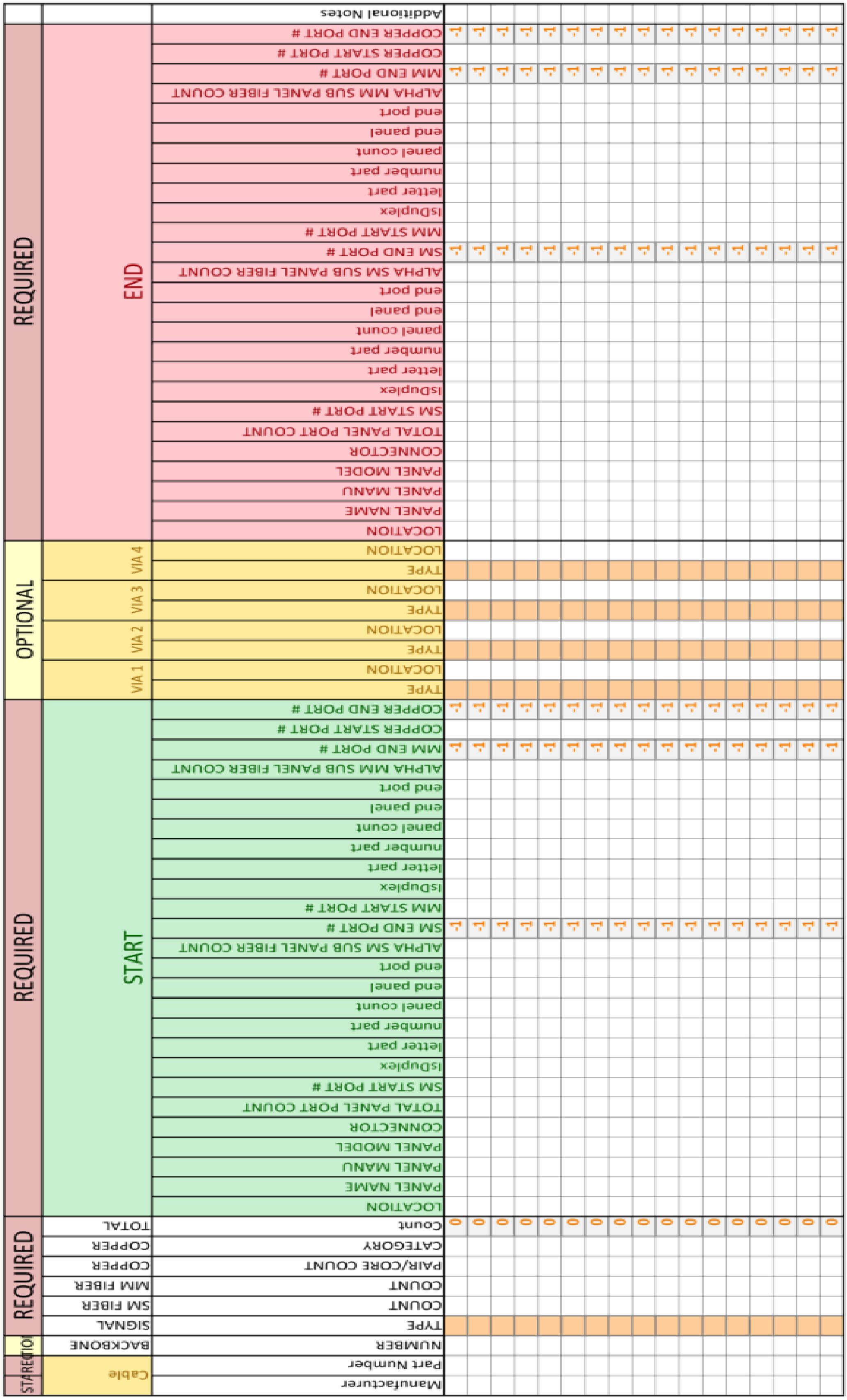

STA	Cable	Manufacturer																	
RE		Part Number																	
CTIO	BACKBONE	NUMBER																	
REQUIRED	SIGNAL	TYPE																	
	SM FIBER	COUNT																	
	MM FIBER	COUNT																	
	COPPER	PAIR/CORE COUNT																	
	COPPER	CATEGORY																	
	TOTAL	Count	0	0	0	0	0	0	0	0	0	0	0	0	0	0	0	0	0
REQUIRED	START	LOCATION																	
		PANEL NAME																	
		PANEL MANU																	
		PANEL MODEL																	
		CONNECTOR																	
		TOTAL PANEL PORT COUNT																	
		SM START PORT #																	
		isDuplex																	
		letter part																	
		number part																	
		panel count																	
		end panel																	
		end port																	
		ALPHA SM SUB PANEL FIBER COUNT																	
		SM END PORT #	-1	-1	-1	-1	-1	-1	-1	-1	-1	-1	-1	-1	-1	-1	-1	-1	-1
		MM START PORT #																	
		isDuplex																	
		letter part																	
		number part																	
		panel count																	
		end panel																	
		end port																	
		ALPHA MM SUB PANEL FIBER COUNT																	
		MM END PORT #	-1	-1	-1	-1	-1	-1	-1	-1	-1	-1	-1	-1	-1	-1	-1	-1	-1
		COPPER START PORT #																	
		COPPER END PORT #	-1	-1	-1	-1	-1	-1	-1	-1	-1	-1	-1	-1	-1	-1	-1	-1	-1
OPTIONAL	VIA 1	TYPE																	
		LOCATION																	
	VIA 2	TYPE																	
		LOCATION																	
	VIA 3	TYPE																	
		LOCATION																	
	VIA 4	TYPE																	
		LOCATION																	
REQUIRED	END	LOCATION																	
		PANEL NAME																	
		PANEL MANU																	
		PANEL MODEL																	
		CONNECTOR																	
		TOTAL PANEL PORT COUNT																	
		SM START PORT #																	
		isDuplex																	
		letter part																	
		number part																	
		panel count																	
		end panel																	
		end port																	
		ALPHA SM SUB PANEL FIBER COUNT																	
		SM END PORT #	-1	-1	-1	-1	-1	-1	-1	-1	-1	-1	-1	-1	-1	-1	-1	-1	-1
		MM START PORT #																	
		isDuplex																	
		letter part																	
		number part																	
		panel count																	
		end panel																	
		end port																	
		ALPHA MM SUB PANEL FIBER COUNT																	
		MM END PORT #	-1	-1	-1	-1	-1	-1	-1	-1	-1	-1	-1	-1	-1	-1	-1	-1	-1
		COPPER START PORT #																	
		COPPER END PORT #	-1	-1	-1	-1	-1	-1	-1	-1	-1	-1	-1	-1	-1	-1	-1	-1	-1
		Additional Notes																	

A sample of a LAWA-required WireCAD Backbone Segment spreadsheet.

	REQUIRED																				
		SOURCE EQUIPMENT							Jumper To	CH PANEL/PUNCH DO			Backbone To	CH PANEL/PUNCH DO			Jumper To	REQUIRED DESTINATION EQUIPMENT							FINAL
CKT#	DESCRIPTION	OWNER	STRAND/CORE #	MANU	EQUIP NAME	LOCATION	PORT	CONN	TYPE	PANEL NAME	LOCATION	PORT		PANEL NAME	LOCATION	PORT		MANU	EQUIP NAME	LOCATION	PORT	CONN	TYPE	ACTION
1																								
2																								
3																								
4																								
5																								
6																								
7																								
8																								
9																								
10																								
11																								
12																								
13																								
14																								
15																								
16																								
17																								
18																								
19																								
20																								

A sample of a LAWA-required WireCAD Circuit spreadsheet.

1.28. ACCEPTANCE TESTING & COMMISSIONING

1.28.1. All IT Infrastructure shall have a final acceptance test plan reviewed and approved by LAWA.

1.28.2. All Acceptance Test Plan(s) shall include objectives, procedures, a list of infrastructure and/or equipment to be tested, proposed test equipment used, expected results, test result worksheet, testing schedule, and required LAWA resources.

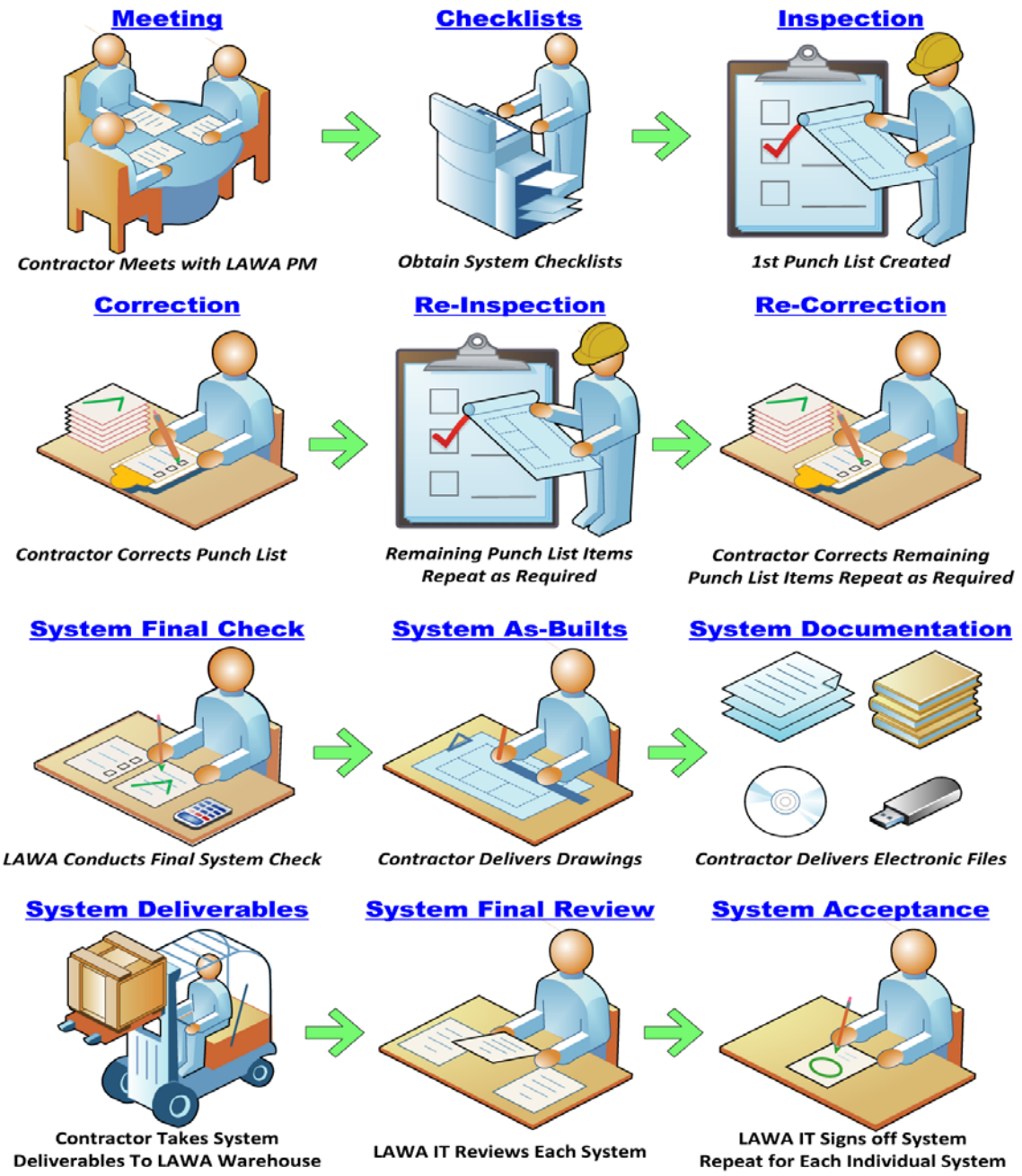

A Graphic summary of the major steps to final acceptance.

1.28.3. Inspection is a mandatory minimum two-step process. The first step requires completion of the IT Infrastructure Pre-acceptance Inspection Checklist shown below. A punch list is created and corrections are made. Then the second step of re-inspection occurs. This continues until all punch list items are remedied to LAWA's requirements.

IT Infrastructure Pre-Acceptance Inspection Checklist

Location				☑ By	Date	Comments
❑	IT FACILITIES					
	❑	Location				
		❑	Verified against the drawings?			
		❑	Location drawings provided?			
		❑	Singleline diagram provided?			
		❑	Riser diagram provided?			
		❑	Elevation drawings provided?			
		❑	Detail drawings provided?			
	❑	Door				
		❑	Room number label?			
	❑	Floor				
		❑	Tiled?			
		❑	Clean?			
		❑	Conduits - firestopped?			
	❑	Ceiling				
		❑	No overhead plumbing except sprinklers?			
		❑	Sprinkler system is double interlocked preaction?			
		❑	Light Fixtures in place?			
		❑	All lamps working? Need Relamp?			
		❑	Cabletray?			
		❑	Cabletray grounded?			
		❑	Cabletray bolts sticking out of nuts less than 1/4-inch or covered with protectors?			
		❑	Cable waterfalls to cabinets?			
		❑	Copper Ladder Rack?			
		❑	Copper Ladder Rack grounded?			
		❑	Copper Ladder Rack bolts sticking out of nuts less than 1/4-inch or covered with protectors?			
		❑	Cable waterfalls to cabinets?			
		❑	Fiber optic cable trough/wire basket?			
		❑	Fiber optic cable trough/wire basket bolts sticking out of nuts less than 1/4-inch or covered with protectors?			
		❑	Fiber optic jumper waterfalls to cabinets?			
	❑	Walls				
		❑	Plywood Backboard - with Fire Rating Stamp exposed?			
		❑	Plywood Backboard - painted white?			
		❑	Plywood Backboard - fastened with anchors not powder actuated impact tool?			
		❑	Electrical outlets?			
		❑	Ground Busbar?			
		❑	Grounding Busbar tied to the TMGB?			
		❑	Conduit slots & sleeves - firestopped?			
	❑	Electrical				
		❑	Panels labeled?			
		❑	House-panel?			
		❑	Number of breakers?			
		❑	Fully populated with breakers?			
		❑	Circuit breaker legend completed with printer - not hand-written?			
		❑	UPS-panel?			

Rev. 3 1 of 7 12/12/15

IT Infrastructure Pre-Acceptance Checklist – Page 1 of 7.

IT Infrastructure Pre-Acceptance Checklist

Location				☑ By	Date	Comments
		❑	Number of breakers?			
		❑	Fully populated with breakers?			
		❑	Circuit breaker legend completed with printer - not hand-written?			
		❑	Liebert Site Link Remote Monitoring installed?			
		❑	Liebert Site Link Remote Monitoring tested?			
		❑	Liebert Site Link Remote Monitoring connected?			
	❑	**Mechanical**				
		❑	Liebert HVAC installed?			
		❑	Drip pan?			
		❑	Condensate drain?			
		❑	Temperature controls?			
		❑	Liebert Site Link Remote Monitoring installed?			
		❑	Liebert Site Link Remote Monitoring tested?			
		❑	Liebert Site Link Remote Monitoring connected?			
	❑	**Final Acceptance**				
		❑	Inspection completed?			
		❑	Punch list completed?			
		❑	Pre-Acceptance sign-off completed?			
	❑	**Lessons Learned?**				
❑	**Heating/Ventilation/Air Conditioning (HVAC)**					
	❑	**HVAC Location**				
		❑	Verified against the drawings?			
		❑	Location drawings provided?			
		❑	Singleline diagram provided?			
		❑	Riser diagram provided?			
		❑	Elevation drawings provided?			
		❑	Detail drawings provided?			
	❑	**UPS Installation**				
		❑	Manufacturer			
		❑	Size			
	❑	**Final Deliverables**				
		❑	Site clean-up/Rubbish removal completed?			
		❑	Major deliverables/Spare parts received?			
		❑	As-built drawings?			
		❑	Electronic files?			
		❑	Test reports provided?			
		❑	Licenses/Certificates provided?			
		❑	Equipment/Material List submitted?			
		❑	O&M user's manuals provided?			
		❑	Singleline/Network diagram provided?			
		❑	Configuration baseline provided?			
		❑	Back-up/Start-up procedures provided?			
		❑	Keys provided?			

IT Infrastructure Pre-Acceptance Inspection Checklist

Location				☑ By	Date	Comments
		❑	Passwords provided?			
		❑	Product warranties provided?			
		❑	System warranties provided?			
		❑	Contractor contacts provided?			
	❑	**Final Acceptance**				
		❑	Inspection completed?			
		❑	Punch list completed?			
		❑	Final sign-off completed?			
	❑	**Lessons Learned?**				
❑	**UNINTERRUPTILE POWER SUPPLY (UPS)**					
	❑	**UPS Location**				
		❑	Verified against the drawings?			
		❑	Location drawings provided?			
		❑	Singleline diagram provided?			
		❑	Riser diagram provided?			
		❑	Elevation drawings provided?			
		❑	Detail drawings provided?			
	❑	**UPS Installation**				
		❑	Manufacturer			
		❑	Size			
		❑	Maintenance Bypass installed?			
		❑	Backup power for what?			
	❑	**Final Deliverables**				
		❑	Site clean-up/Rubbish removal completed?			
		❑	Major deliverables/Spare parts received?			
		❑	As-built drawings?			
		❑	Electronic files?			
		❑	Test reports provided?			
		❑	Licenses/Certificates provided?			
		❑	Equipment/Material List submitted?			
		❑	O&M user's manuals provided?			
		❑	Singleline/Network diagram provided?			
		❑	Configuration baseline provided?			
		❑	Back-up/Start-up procedures provided?			
		❑	Keys provided?			
		❑	Passwords provided?			
		❑	Product warranties provided?			
		❑	System warranties provided?			
		❑	Contractor contacts provided?			
	❑	**Final Acceptance**				
		❑	Inspection completed?			
		❑	Punch list completed?			
		❑	Final sign-off completed?			

IT Infrastructure Pre-Acceptance Checklist

Location				☑ By	Date	Comments
	❑	Lessons Learned?				
❑	FIBER OPTIC					
	❑	Location				
		❑	Verified against the drawings?			
		❑	Location drawings provided?			
		❑	Singleline diagram provided?			
		❑	Riser diagram provided?			
		❑	Elevation drawings provided?			
		❑	Detail drawings provided?			
	❑	Fiber Optic Patch Panels				
		❑	Patch Panel(s) I.D. number?			
		❑	LAWA's standard - Bejed or Corning?			
		❑	Fiber cables match the fiber riser diagram?			
		❑	Fiber cables fusion-spliced to pigtails?			
		❑	Fiber panels labeled with cable destinations?			
	❑	Fiber Optic Backbone Cables				
		❑	Verified against SMF Riser Diagram?			
		❑	Fiber cables neatly dress?			
		❑	Fiber cable management straight and level?			
		❑	LC connectors installed?			
		❑	WireCAD fiber backbone 3rd-party import verification provided?			
		❑	WireCAD fiber backbone spreadsheet provided?			
	❑	Fiber Optic Circuits				
		❑	Fiber jumpers labeled per standards?			
		❑	WireCAD fiber circuit 3rd-party import verification provided?			
		❑	WireCAD fiber circuit spreadsheet provided?			
	❑	Final Acceptance				
		❑	Inspection completed?			
		❑	Punch list completed?			
		❑	Final sign-off completed?			
	❑	Lessons Learned?				
❑	IT INFRASTRUCTURE					
	❑	Location				
		❑	Verified against the drawings?			
		❑	Location drawings provided?			
		❑	Singleline diagram provided?			
		❑	Riser diagram provided?			
		❑	Elevation drawings provided?			
		❑	Detail drawings provided?			

IT Infrastructure Pre-Acceptance Inspection Checklist

Location		☑ By Date	Comments
❑ **Cabinets**			
❑	LAWA's standard - Damac? With UL label?		
❑	Anchored - 3/8"/1/2" - 4 points?		
❑	Sidewalls or cross-bay-anchoring?		
❑	Cabinet Light?		
❑	Power strip - Rear cabinet hinge side?		
❑	Power strip labeled as to the circuit breaker?		
❑	Locking doors - 751 key?		
❑	Cabinet labeled front and back?		
❑	Grounding Busbar?		
❑	Busbar grounded to TGB?		
❑	No open holes in the cabinet top for water to enter?		
❑ **Conduit**			
❑	Verified against the copper riser diagram?		
❑	2 - 4-inch backbone conduits MPOE to IT room?		
❑	All conduits have bushings?		
❑	Conduits - firestopped?		
❑ **Copper Backbone Cables**			
❑	Verified against the copper riser diagram?		
❑	? pair CAT 3 Backbone cable to MPOE?		
❑	? pair CAT 3 to IT rooms?		
❑ **Copper Patch Panels**			
❑	CAT 6A rated?		
❑	CAT 6A Consolidation Points?		
❑	Patch panel labeled?		
❑	Cable management for every patch panel?		
❑ **Copper CAT 6A Horizontal Cables**			
❑	CAT 6A rated?		
❑	CAT 6A cables labeled?		
❑	CAT 6A cables neatly dressed?		
❑	CAT 6A cables tested and certified?		
❑	CAT 6A cables test results submitted?		
❑ **Copper Cables - Other Systems**			
❑	Locations verified on drawings?		
❑	Other Systems		
❑	Test results provided?		
❑ **Environmental Monitoring**			
❑	Locations verified on drawings?		
❑	Camera		
❑	Temperature		
❑	Humidity		
❑	Water		
❑ **Work Area Outlets**			
❑	Locations verified on drawings?		

Rev. 3 5 of 7 12/12/15

IT Infrastructure Pre-Acceptance Checklist – Page 5 of 7.

IT Infrastructure Pre-Acceptance Checklist

Location		☑ By Date	Comments
❑	WAO's labeled?		
❑ **Maintenance Holes (Manholes MH)**			
❑	Locations verified on drawings?		
❑	Locations less than 400 feet apart?		
❑	MH size? (At least 6' W x 6' L x 7' H)		
❑	MH rating?		
❑	Ladder provided?		
❑	Cable racking provided?		
❑	Cable pulling eyes provided?		
❑	Conduit duct plugs provided?		
❑	Grounding provided?		
❑	Sump drain provided?		
❑	Butterfly drawings provided?		
❑ **Hand Holes (Manholes MH)**			
❑	Locations verified on drawings?		
❑	Locations less than 400 feet apart?		
❑	HH size?(At least 3' W x 5' Lx 4' H)		
❑	MH rating?		
❑	Cable racking provided?		
❑	Cable pulling eyes provided?		
❑	Conduit duct plugs provided?		
❑	Grounding provided?		
❑	Sump drain provided?		
❑	Butterfly drawings provided?		
❑ **Outside Plant Conduit (OSP)**			
❑	Locations verified on drawings?		
❑	Minimum four 4-inch conduits?		
❑	Minimum 24-inch bend radii for fiber?		
❑	Minimum 48-inch bend radii for copper?		
❑ **Outside Pedestals**			
❑	Locations verified on drawings?		
❑	Stainless steel constructions		
❑	Concrete pad exceeds pedestal outline by 4-inches?		
❑	Grounding provided?		
❑	Pedestal labeled?		
❑	Butterfly drawings provided?		
❑ **Final Acceptance**			
❑	Inspection completed?		

IT Infrastructure Pre-Acceptance Inspection Checklist

Location				☑ By	Date	Comments
		❑	Punch list completed?			
		❑	Final sign-off completed?			
	❑	Lessons Learned?				
❑	NETWORK INFRASTRUCTURE					
	❑	Field Equipment, End-User Equipment, Head-End Equipment Locations				
		❑	Location drawings provided?			
		❑	Locations verified against the drawings?			
		❑	Singleline diagram provided?			
		❑	Riser diagram provided?			
		❑	Elevation drawings provided?			
		❑	Detail drawings provided?			
	❑	Final Acceptance				
		❑	Inspection completed?			
		❑	Punch list completed?			
		❑	Final sign-off completed?			
	❑	Lessons Learned?				
❑	IT SYSTEM INFRASTRUCTURE - (Duplicate for each IT System)					
	❑	Field Equipment, End-User Equipment, Head-End Equipment Locations				
		❑	Location drawings provided?			
		❑	Locations verified against the drawings?			
		❑	Singleline diagram provided?			
		❑	Riser diagram provided?			
		❑	Elevation drawings provided?			
		❑	Detail drawings provided?			
	❑	Final Acceptance				
		❑	Inspection completed?			
		❑	Punch list completed?			
		❑	Final sign-off completed?			
	❑	Lessons Learned?				

IT Infrastructure Pre-Acceptance Checklist – Page 7 of 7.

1.28.4. Final acceptance test plans shall be reviewed and approved by LAWA. LAWA will be the sole determinant of the acceptability of the test plan and any disputes arising from discrepancies found in test plan data.

1.28.5. LAWA reserves the right to review, witness, and validate the execution of all formal test procedures.

1.28.6. LAWA reserves the right to designate third parties to review, witness, and validate the execution of all formal test procedures.

1.28.7. Contractor shall submit test results in PDF form submitted to LAWA for review and comment within 3 days of completion of the individual test.

1.28.8. Contractor shall supply the names and credentials of persons who performed the test.

1.28.9. Contractor shall correct all discrepancies or problems discovered during testing at no cost to LAWA.

1.28.10. If the newly-installed IT Infrastructure does not perform satisfactorily, the Contractor shall make corrections and modifications at Contractor's cost and then schedule a new test with LAWA.

1.28.11. Performance of Infrastructure shall equal or exceed criteria stated in individual Specification sections.

1.28.12. Field Testing of all cabling and connectors shall comply with and be tested to ANSI/TIA Standards.

1.28.13. Final Acceptance shall be considered complete when the IT Infrastructure has been demonstrated to perform in accordance with Standards, as demonstrated by:

- Completion of the installation
- Remediation of punch list items
- Completion of all in-progress and final inspections
- Receipt of all tests in PDF format
- Contractor-provided data input of all spreadsheets
- HEI Enterprises' confirmed accuracy and importability of the WireCAD data
- Receipt of major Deliverables
- Site Cleaning/Rubbish Removal
- As-Built Drawings/ Plans Submittal
- AutoCAD Electronic As-Built Files Submitted
- Equipment/ Material List Submittal
- O & M User Manuals Submittal
- Key Transfer
- Passwords Transferred
- Licenses Transferred

- O & M Training
- Users Training
- Contractors' Contact List for Warranty issues
- Product Warranties
- Systems Warranties
- Lessons Learned

1.29. TRAINING

1.29.1. Contractors shall provide the following training and training documentation for new and upgraded systems.

- Operations manuals
- Technical Staff training by Contractor and/or 3rd party
- User's manuals
- User Staff training
- Equipment training
- Application training
- Application configuration Booklets
- Confined space training where applicable

1.30. WARRANTIES

1.30.1. Contractors shall warrant that:

- IT Infrastructure materials and workmanship shall meet or exceed LAWA and industry standards and be fully guaranteed for a minimum of one (1) year from Final Acceptance unless specified otherwise.
- Structured Cabling Solutions shall have a minimum of twenty (20) years manufacturer warranty.
- All copper and fiber approved cabling and components meet or exceed the specifications of ANSI/TIA/EIA Standards.

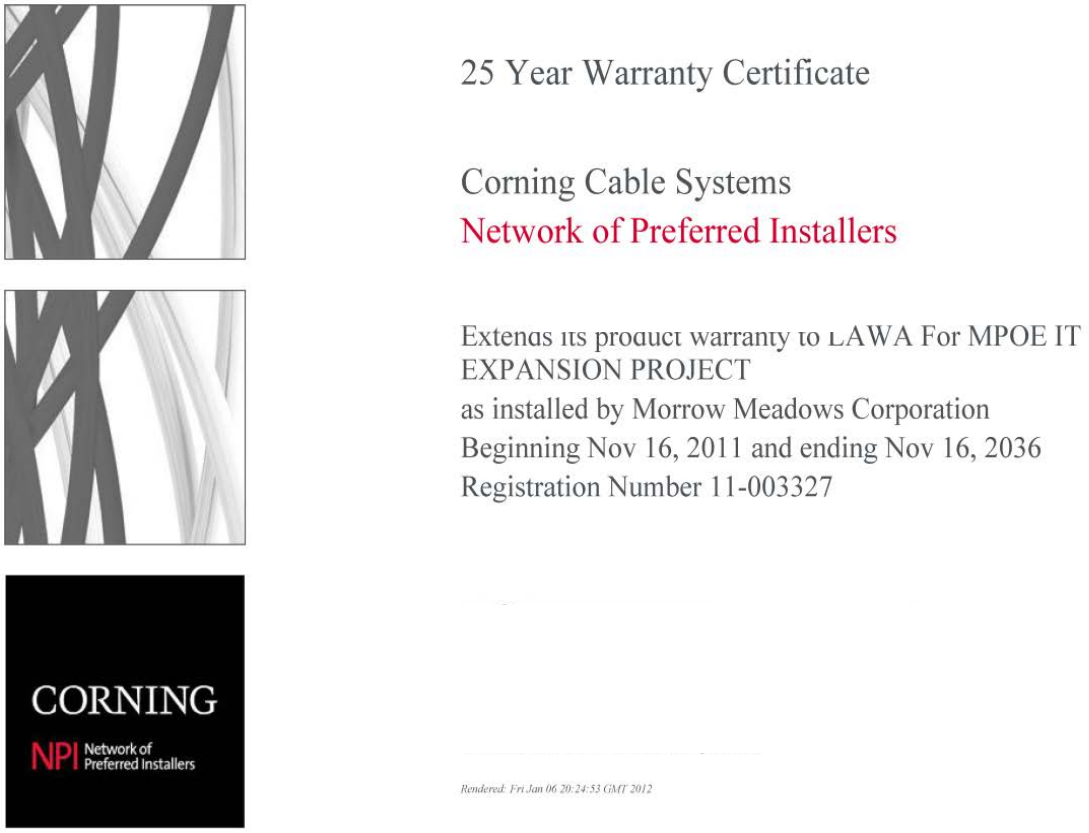

A sample of an installed fiber optic cabling warranty.

A sample of an installed Structured Cabling System warranty.

1.31. PROJECT CLOSEOUT

1.31.1. All LAWA projects with IT components shall go through a project closeout process that includes verification of all items specified on the Project Closeout Checklist shown below.

Los Angeles World Airports
Information Management & Technology Group

PROJECT CLOSEOUT CHECKLIST

Project Name: _____ Contract No: _____

Project Manager: _____

Check the appropriate system below:

	IMTG Infrastructure		Voice		Badging		Others
	Paging		ACAMS		CAD		Fiber
	Servers		Wireless		CATV		Facilities
	Network		Radio		CCTV		UPS

No.	Description	Date Received	Received By	Date Approved
1	Punchlist Completion			
2	Major Deliverables Verification			
3	Site Cleaning/Rubbish Removal			
4	As-Built Drawings/ Plans Submittal			
5	Third-Party WireCAD importability verification			
6	Completed WireCAD Backbone Spreadsheet			
7	Completed WireCAD Circuit Spreadsheet			
8	AutoCAD and PDF Electronic As-Built - Note: PDF's are not a substitute for AutoCAD Files Submittal			
9	Equipment/ Material List Submittal			
10	O & M User Manuals Submittal (Administrative)			
11	Network Diagram			
12	Network Configuration (Protocol & Port Assignments)			
13	Spare Equipment & Parts Delivery			
14	Keys Transfer			
15	Passwords Transfer			
16	Final Testing			
17	Test Reports/ Certificates Submittal			
18	Final Inspection			
19	O & M Training			
20	Users Training			
21	Back-up/Start-up Procedure and Software			
22	Contractors' Contacts			
23	Product Warranties			
24	Systems Warranties			
25	Lesson Learned			
26	Final Acceptance			
27	Final Invoice			

IT Infrastructure Project Closeout Checklist.

2. APPENDICES

2.1. APPENDIX A - GLOSSARY

AC	Alternating Currents
ACAMS	Access Control And Monitoring System
ACM's	Asbestos Containing Materials
ACR	Attenuation To Crosstalk Ratio
ACR-N	Attenuation To Crosstalk Ratio Radio Near-End
ADA	Americans with Disabilities Act
AFF	Above Finished Floor
AHJ	Authority Having Jurisdiction
AIA	American Institute of Architects
ANSI	American National Standards Institute
AOA	Airfield Operations Area
AP	Access Point
APC	American Power Conversion
ASTM	American Society for Testing and Materials
ATS	Automatic Transfer Switch
AVE. PS ANEXT	Average Power Sum Alien Near-End Crosstalk
AVE. PS AACR-F	Average Power Sum Alien Attenuation to Crosswalk Ratio Far-End
AWG	American Wire Gauge
BAS	Building Automation System
BD	Backbone Distribution
BICSI	Building Industry Consulting Service International
BNC	Bayonet Navel Connector
BOAC	Board of Airport Commissioners
BTU	British Thermal Unit
CAD	Computer Aided Dispatch
CADD	Computer Aided design and Drafting
CAT	Category e.g. CAT6
CATV	Cable Television
CCTV	Closed Circuit Television
CMS	Cable Management Software
CO	Central Office
COAX	Coaxial Cable
CP	Consolidation Point
CPE	Customer Premise Equipment
CPP	Copper Patch Panel
DAS	Distributed Antenna System
DS1/T-1	Digital Signal 1, Trunk level 1
dB	Decibel
DC	Data Center
DEMARC	Demarcation
EF	Entrance Facility
EIA	Electronic Industries Alliance
ELFEXT	Equal Level Far-End Crosstalk
ELTCTL	Equal Level Transverse Conversion Transfer Loss
EMI	Electromagnetic Interference

EMT	Electrical Metallic Tubing
ENT	Electrical Non-Metallic Tubing
FEXT	Far-End Crosstalk
FIS	Federal Inspection Services
FLS	Fire Life Safety
FLSS	Fire Life Safety System
FPP	Fiber Patch Panel
FR-S	Fire Retardant Stamp
FOTS	Fiber Optics Transceiver
GRC	Galvanized Rigid Conduit
HD	Horizontal Distribution
HDPE	High Density Polyethylene
HH	Hand Holes
HVAC	Heating, Ventilation, and Air Conditioning
IEEE	Institute of Electrical and Electronics Engineers
IDF	Intermediate Distribution Frame
HDPE	High-Density Polyethylene
IMTG	Information Management and Technology Group
IP	Internet Protocol
ISO	International Organization for Standardization
ISP	Inside Plant
IT	Information Technology
IT Room	TR Room
Kva	1,000 Volt Amps
L&S	Locations & Spaces
LABC	Los Angeles Building Code
LADBS	Los Angeles Department of Building & Safety
LAN	Local Area Network
LC-UPC	_____ Ultimate Physical Contact
LAWA	Los Angeles World Airports
LFMC	Liquid-Tight Flexible Steel
MC	Media Converter
MDF	Main Distribution Frame
MEP	Mechanical, Electrical, and Plumbing
MH	Manhole, Maintenance hole
MHz	Megahertz
MMF	Multimode Fiber
MPOE	Minimum Point Of Entrance
MUTOA	Multi-User Telecommunications Outlet Assembly
OFMP	Optical Fiber Non-conductive Plenum
OSP	Outside Plant
NEC	National Electrical Code®
NEMA	National Electrical Manufacturers Association
NESC	National Electrical Safety Code®
NEXT	Near-end crosstalk
NFPA	National Fire Protection Association
NIC	Network Interface Card
NID	Network Interface Device
nm	Nanometers
OSHA	Occupational Safety and Health Administration
OSP	Outside Plant

OTDR	Optical Time Domain Reflectometer
PA	Public Address System
PB	Pull Box
PDU	Power Distribution Unit
PE	Premise Equipment
PON	Passive Optical Network
PPE	Personal Protective Equipment
PS AACR-F	Power Sum Alien Attenuation to Crosswalk Ratio Far-End
PS ACR-N	Power Sum Attenuation to Crosswalk Ratio Far-End
PS ANEXT	Power Sum Alien Near-End Crosstalk
PS EL FEXT	Power Sum Equal Level Far-End Crosstalk
PS NEXT	Power Sum Near-End Crosstalk
PVC	Polyvinyl Chloride
QoS	Quality of Service
RCDD	Registered Communications Distribution Designer
RCV	Receive
RFB	Request For Bid
RFI	Radio Frequency Interference
RFB	Request For Bid
RFP	Request For Proposal
RJ	Registered Jack
RSSI	Received Signal Strength Indicator
RU	Rack Unit
RX	Receive
SMF	Singlemode Fiber
SNMP	Simple Network Management Protocol
SOP	Standards of Practice
SP	Service Provider
STI	Specified Technologies Inc.
STP	Shielded twisted-pair
T-1/DS1	Trunk level 1, Digital Signal 1
TCL	Transverse Conversion Loss
TCWC's	Tenant Common-Use Wiring Closets
TDMM	Telecommunications Distribution Methods Manual
TDR	Time Domain Reflectometer
TE	Telecommunications Enclosure
TEBC	Telecommunications Equipment Bonding Conductor
TGB	Telecommunications Grounding Busbar
TIA	Telecommunications Industry Association
TMGB	Telecommunications Main Grounding Busbar
TP	Transition Point
TR	Telecommunications Room
TWC	Tenant Wiring Closet
TTY	Teletypewriter
TX	Transmit
UG	Underground
UL	Underwriters Laboratories
UPS	Uninterruptible Power Supply
UTP	Unshielded Twisted Pair
USR	Ulititly Shutdown Request
VoIP	Voice over Internet Protocol

VRLA	Valve-regulated Lead-acid
XMT	Transmit
WAO	Work Area Outlet
WAN	Wide Area Network
WDM	Wavelength Division Multiplexer

2.2. APPENDIX B - INFORMATION DISCLOSURE POLICY REFERENCE

LAWA IT POLICY	
Title: External Party Information Disclosure Policy	
7.3-POL-External Party Information Disclosure_v1.4	
Authority: Chief Information Officer	Date: 08/01/2011

1.0 PURPOSE

The purpose of this policy is to prevent confidential information leakage by LAWA employees or contractors and their sub-contractors when given access to LAWA sensitive information.

2.0 SCOPE

All Information under the control of Los Angeles World Airports ("LAWA") in the possession of LAWA employees or contractors and their sub-contractors needs to be protected from unauthorized disclosure, use, modification and deletion.

3.0 APPLICABILITY

3.1 If LAWA employees or contractors have questions regarding disclosure of specific information, it shall be directed to the relevant Information Owner. In addition, employees or contractors are expected to extend these policies to fit the specific circumstances they encounter, to use their professional judgment, and consult the Office of Information Security for guidance in those instances where it is appropriate.

3.2 Any employee found to have violated this policy may be subject to disciplinary action, up to and including termination of employment. Any person who is not an employee who violates this policy is subject to revocation of access to LAWA systems and networks. Violation of this policy may include civil and criminal penalties not described here.

3.3 As this is an information disclosure policy, there are no exceptions to this policy. All employees or contractors must abide by this policy.

4.0 POLICY STATEMENT

4.1 **Need To Know** – Unless the information has been designated as "Public", all LAWA internal information must be protected from unauthorized disclosure to third parties. Third parties may be given access to LAWA internal information only when a necessary "need to know" exists, and when such a disclosure has been expressly authorized by the Information Owner.

4.2 **Access Granting Authority** – Access to LAWA sensitive information by non-LAWA staff requires prior written authorization from the Information Owner or an Organizational Non-Disclosure Agreement has been signed by the contractor for access to specific information related to their contract. If the contractor has custody of LAWA sensitive information and has a need to share this information with their sub-contractors, they must refer all access requests to the relevant Information Owners or require their sub-contractors to sign an Individual Non-Disclosure Agreement. This agreement must be submitted to Office of Information Security for auditing and documentation.

4.3 **Non-Disclosure Agreements** – The disclosure of sensitive information to consultants, contractors, sub-contractors, temporaries, and other third parties must be preceded by the receipt of a signed Individual Non-Disclosure Agreement. When an NDA pertains to an organization, an officer of the recipient organization must sign an Organizational Non-Disclosure Agreement for it to be valid. LAWA employees must not sign NDAs provided by third parties without the authorization of LAWA legal counsel designated to handle intellectual property matters.

4.4 **Third Parties' Request For LAWA Information** – Unless an employee has been authorized by the Information Owner to make disclosures, all requests for information about LAWA and its business must be referred to the Public Relations Office. This policy includes mandatory disclosure related to Title 5 U.S.C. section 552 of the Freedom of Information Act. Such requests include questionnaires, surveys, and newspaper interviews. Exception to this policy is "SSI" information which shall not be shared with anyone unless there is a "need to know" and authorized by the Information Owner.

4.5 **Unassigned Owner** – If LAWA internal information is being considered for disclosure to a third party and does not have a designated Owner, then the disclosure decision must be made by the Chief Information Security Officer.

4.6 **Unmarked Information** – If the information considered for disclosure to third parties is not marked with an appropriate information classification, employees must assume the information is "For Internal Use Only" information, and not approved for public release. Information marked "Public" does not require Owner approval prior to release to third parties.

4.7 **Disclaimers** – It is the Information Owner's responsibility to ensure that any controversial information that is released to third parties must contain the appropriate legal disclaimers. Such disclaimers include words that limit LAWA liability, define the information's intended uses, and inform recipients of potential problems associated with the information.

4.8 **Disclosure Records** – Any employee releasing the information to third parties must maintain records reflecting the sensitive LAWA internal information that has been distributed to third parties. Such records must indicate the types of information disclosed, the receiving third party's name and contact information, and the date of release.

4.9 **Reporting Improper Disclosures** – If sensitive information has been inappropriately disclosed, or is believed to have been inappropriately disclosed, the circumstances must be reported immediately to the relevant Information Owner or the Office of Information Security at INFOSEC@LAWA.ORG

5.0 DEFINITIONS

Information Owner – is an individual or entity that holds managerial and financial accountable for a dataset and that has legal ownership rights of a dataset.

Freedom of Information Act – this is a federal freedom of information law that allows for the full or partial disclosure of unreleased information and documents controlled by the United States Government. The Act defines agency records subject to disclosure and outlines mandatory disclosure procedures.

Non-Disclosure Agreement(NDA) – also known as confidentiality agreement. It is a legal contract between at least two parties that outlines confidential material, knowledge, or information that the parties wish to share with one another for certain purposes.

SSI (Sensitive Security Information) – this is governed by Title 49 CFR Parts 15/1520 of the Code of Federal Regulations and is also related to Part 191 "Withholding Security Information from Disclosure under the Air Transportation Security Act of 1974". Part 191 created the category of sensitive but unclassified information known as SSI and described the information to be protected from disclosure, including "the security program of any airport; the security program of any air carrier; any device for the detection of any explosive or incendiary device or weapon; and, any contingency security plan.

6.0 REFERENCE DOCUMENTS

H.R. 2458 – Federal Information Security Management Act of 2002
http://csrc.nist.gov/drivers/documents/FISMA-final.pdf
FIPS 199 – Stds for Security Categorization of Federal Information and Information Systems.
http://csrc.nist.gov/publications/fips/fips199/FIPS-PUB-199-final.pdf

7.0 ORIGINATOR

Office of Information Security – Reference No. IMT-SP-0006

8.0 ATTACHMENTS

None

9.0 REVISION HISTORY

Vers	Summary of Changes	Author	Date
1.0	Original policy as drafted	Office of Information Security	9/28/2008
1.1	Changed header/footer to Office of Information Security	Office of Information Security	8/27/2009
1.2	Minor changes by the City Attorney office	City Attorney	8/31/2009
1.3	Minor changes by the City Attorney office	City Attorney	8/31/2009
1.4	Revised Section 2, 4, 5, 6	Office of Information Security	8/01/2011

2.3. APPENDIX C - NON-DISCLOSURE CONTRACTOR REFERENCE

Los Angeles World Airports

LOS ANGELES WORLD AIRPORTS

NON-DISCLOSURE AND CONFIDENTIALITY AGREEMENT

This Confidentiality and Non-Disclosure Agreement ("Agreement") is entered into this _____ day of _____, 2012 at Los Angeles, California by and between the **CITY OF LOS ANGELES**, a municipal corporation, acting by order of and through the Executive Director of the Department of Airports (hereinafter known as "City" "LAWA" or "Department") and _____ (hereinafter known as the "Recipient"). Recipient includes directors, officers, employees, agents, consultants, contractors, and sub-contractors, including their respective directors, officers, employees, and agents, of any level or type.

WHEREAS, as a condition of its providing Confidential and Privileged Information, LAWA is requiring each Contractor working on a security or capital program project, whether retained by it or by a third-party for its projects, to enter into this Agreement, thereby acknowledging that each such Recipient understands that it will be required to treat as strictly confidential and privileged any such information so provided, as well as its work product including conclusions of security assessments, evaluations and/or recommendations.

1. **Confidential Information**:

1.1 All documents supplied in connection with _____ (hereinafter referred to as "Project") are the sole and exclusive property of LAWA.

1.2 The Confidential and Privileged Information (also referred to herein as "CPI") covered by this Agreement includes, but is not limited to, the following: data, electronic data or systems information, materials, products, specifications, manuals, plans, calculations, drawings and any other non-public information disclosed or submitted, orally, in writing, or by any other media, to Recipient by LAWA. From time to time, LAWA may, at its sole and exclusive option, update the CPI provided to Recipient, and Recipient has the obligation to notify, as may be applicable, its directors, officers, employees, agents, consultants, contractors, and sub-contractors of any type or level of any such updates. Nothing herein shall require LAWA to disclose any of its information unless it so chooses. All documents shall be identified as Confidential and Privileged by markings, notice or otherwise, but Recipient shall assume that all non-public information is Confidential and Privileged.

1.3 CPI may also include Sensitive Security Information (hereinafter referred to as "SSI"), as defined in the Transportation Security Administration Rules and Regulations, 49 CFR 1500.1 through 1520.7, and/or Critical Infrastructure Information (hereinafter referred to as "CII") as defined in 6 USC 131, et seq. and any rules or regulation enacted pursuant thereto. All federal laws and regulations shall be complied with for the protection of this information. When Confidential and Privileged Information or CPI is used in this Agreement it also includes SSI and CII.

2. **Recipient's Obligations**:

2.1 LAWA's CPI is highly sensitive and vital to the protection of critical transportation infrastructure and public safety, and accordingly it is not for public dissemination or for disclosure to any

Los Angeles World Airports

unauthorized individual. Recipient shall hold CPI in confidence. Recipient shall not use CPI other than for the Project, and shall disclose it only to its officers, directors, employees, agents, consultants, contractors, sub-contractors of any level or type who have a security related need to know and who have executed a copy of LAWA's Non-Disclosure and Confidentiality Agreement. Recipient shall not disclose, publish or otherwise reveal any CPI to any other party whatsoever except with the specific prior written authorization of LAWA. Each director, officer, employee, agent, consultant, sub-consultant, contractor, and sub-contractor of Recipient involved in the Project in any manner shall be informed in writing of these confidential and non-disclosure obligations and each must acknowledge in writing that he/she understands the obligations contained in this Agreement.

2.2 All CPI furnished in tangible form shall not be duplicated by Recipient except for purposes of this Project. Upon the request of LAWA, Recipient shall return all CPI, including copies, reproductions or other media containing such CPI, within ten (10) calendar days of such request. At Recipient's option, and with LAWA's written authorization, any documents or other media developed by Recipient containing CPI may be destroyed by shredding by Recipient. Recipient shall provide a written certificate to LAWA regarding destruction within five (5) calendar days thereafter.

2.3 If a subpoena, discovery request, Court Order, Freedom of Information Request, Public Record Act Request, or any other request or demand authorized by law (hereinafter collectively referred to as "Demand") seeking disclosure of CPI is received, Recipient shall immediately notify LAWA of such demand and foreword all demands to the Los Angeles City Attorney's Office, Airport Division at the address set forth in paragraph 11 hereof. In response to any Demand seeking disclosure of CPI, Recipient shall assert all federal, state and/or local privileges available to any public entity within the State of Recipient's principal place of business and the State of California. Recipient shall take all legal steps necessary to protect the CPI from improper disclosure and to fully cooperate in LAWA's efforts to assure that confidential treatment will be afforded the CPI. Recipient shall only disclose that which a Court of competent jurisdiction has ordered it to disclose.

2.4 Recipient agrees that if at any time it discovers that CPI has been disclosed in violation of this agreement, it will immediately report the fact of and the circumstances regarding such disclosure to LAWA and shall use its best efforts to retrieve any tangible CPI so disclosed. Moreover, Recipient has received a copy of the LAWA Office of Information Security's External Party Information Disclosure Policy and agrees to abide by the requirements found within this policy. Recipient further agrees to promptly report all violations or suspected violations of LAWA's information security policies to the IMTG - Office of Information Security at 424-646-7000.

2.5 Recipient agrees that it will enforce the provisions of this Agreement within its offices and among its personnel and as to its agents, consultants, sub-consultants, contractors and sub-contractors of all levels and types and their respective directors, officers, employees, and agents. Recipient agrees that it will require its agents, consultants, sub-consultants, contractors, and sub-contractors to accept and enforce the provisions of this Agreement within their respective offices and among their directors, officers, employees, agents, consultants, sub-consultants, contractors and sub-contractors of all levels and types and their respective directors, officers, employees, and agents.

Los Angeles World Airports

3. **Term/Conditions**:

3.1 The obligations of this Agreement shall survive any of Recipient's contractual obligations regarding the Project or until Recipient is expressly released, in writing, by LAWA. Further, the obligations contained herein not to disclose shall not be affected by bankruptcy, receivership, assignment, attachment or seizure procedures, whether initiated by or against Recipient, nor by the rejection of any agreement between LAWA and Recipient, by a trustee of Recipient in bankruptcy, or by Recipient as a debtor-in-possession or the equivalent of any of the foregoing under local law.

3.2 Recipient acknowledges that the unauthorized disclosure and handling of the CPI could cause substantial damage to Public Safety and Security and significantly endanger LAWA, its patrons, its facilities, and the general public and could result in civil or criminal fines, penalties and/or monetary damages.

3.3 Recipient acknowledges that the obligations of confidence required hereunder are extraordinary and unique and are vital to the security and well-being of LAWA, its patrons, facilities, and the general public, and that damages at law may be an inadequate remedy for any breach, or threatened breach, of this Agreement and that LAWA shall be entitled, in addition to all other rights or remedies, to seek such restraining orders and injunctions as it may deem appropriate for any such breach prohibiting disclosure of information in breach of this Agreement, without being required to show any actual damage or to post any bond or other security and Recipient consents thereto. Recipient understands that City or the United States Government may seek additional remedies available to it to enforce this Agreement and/or prevent the disclosure of CPI, including but not limited to, imposition of civil penalties, and any other enforcement or corrective action.

3.4 If Recipient violates the terms or conditions of this Agreement, such violation may result civil penalty against it pursuant to the United States authorities under 49 U.S.C. 46301 and 49 CFR Part 1520 or other federal or state statutes, LAWA may take such other enforcement or corrective action as it deems appropriate.

3.5 Recipient hereby assigns to LAWA all royalties, remunerations and emoluments that have resulted, will result, or may result from any disclosure, publication or revelation of CPI not consistent with the terms of this Agreement. In addition to the above herein contained, notwithstanding any other damages, royalties, remunerations, and/or emoluments recoverable under this Agreement and/or any contract between Recipient and LAWA that has CPI being disclosed to Recipient by LAWA, the Recipient shall be responsible to LAWA, as additional compensation, in the amount of Five Thousand Dollars ($5,000) for each separate or individual non-authorized disclosure of CPI.

3.6 Recipient may use the CPI only for the purpose of preparing a bid for Project and/or works to be performed by Recipient for the Project

3.7 Recipient will be jointly and severally liable to LAWA for any breach of this Agreement by its respective directors, officers, employees, agents, consultants, sub-consultants, contractors, and/or sub-contractors and their respective directors, officers, employees, agents and consultants.

Los Angeles World Airports

4. **Other Information**:

4.1 Recipient shall have no obligation under this Agreement with respect to CPI that is or becomes publicly available without breach of this Agreement by Recipient; is rightfully received without obligations of confidentiality; or is developed by Recipient without breach of this Agreement; provided, however, such CPI shall not be disclosed until thirty (30) days after written notice of intent is given to LAWA along with the reasons for disclosure.

5. **No License**:

5.1 Nothing contained herein shall be construed as granting or conferring any rights by license or otherwise in any CPI. It is understood and agreed that neither party solicits any change in the organization, business practice, service or products of the other party, and that the disclosure of CPI shall not be construed as evidencing any intent by a party to purchase any products or services of the other party nor as an encouragement to expend funds in development or research efforts. CPI may pertain to prospective or unannounced services or facilities.

6. **No Publicity**:

6.1 Recipient agrees not to disclose its participation in this undertaking, the existence or terms and conditions of the Agreement, or the fact that discussions are being held with the LAWA unless expressed written authorization is received from the LAWA and except as consistent with Federal and State public disclosure codes, statutes, or regulations.

7. **Governing Law and Equitable Relief**:

7.1 This Agreement shall be governed and construed in accordance with the laws of the State of California. Recipient consents to the exclusive jurisdiction of the appropriate United States Federal Court located within the County of Los Angeles, California or the Los Angeles Superior Court located in the Southwest Judicial District for any dispute arising out of this Agreement. Recipient agrees that in the event of any breach or threatened breach by Recipient, LAWA may, in addition to any other legal remedies which may be available, seek such equitable relief as may be necessary to protect it against any such breach or threatened breach.

8. **Final Agreement**:

8.1 This Agreement terminates and supersedes all prior understandings or agreements on the subject matter hereof and constitutes the complete agreement of the parties on its subject matter. This Agreement may be modified only by a further writing that is duly executed by both parties.

9. **No Assignment**:

9.1 Recipient may not assign this Agreement or any interest herein without LAWA's express prior written consent.

Los Angeles World Airports

10. **Severability**:

10.1 If any term of this Agreement is held by a court of competent jurisdiction to be invalid or unenforceable, then this Agreement, including all of the remaining terms, will remain in full force and effect as if such invalid or unenforceable term had never been included.

11. **Notices**:

11.1 Any notice required by this Agreement or given in connection with it, shall be in writing and shall be given to the appropriate party by personal delivery or by certified mail, postage prepaid, or recognized overnight delivery services.

Written notices to LAWA hereunder, with a copy to the City Attorney of the City of Los Angeles, shall be addressed to:

Department of Airports	**Office of City Attorney**
1 World Way	**1 World Way**
Post Office Box 92216	**Post Office Box 92216**
Los Angeles, CA 90009-2216	**Los Angeles, CA 90009-2216**

or to such other address as LAWA may designate by written notice to Recipient.

Written notices to Recipient hereunder shall be addressed to:

_____

_____

_____

or to such other address as Recipient may designate by written notice to LAWA.

12. **No Implied Waiver**.

12.1 Either party's failure to insist in any one or more instances upon strict performance by the other party of any term or terms of this Agreement shall not be construed as a waiver of any continuing or subsequent violation of any term hereof.

12.2 By granting Recipient access to information, LAWA does not waive any statutory or common law evidentiary privileges or protections that it may assert in any administrative or judicial proceeding to protect CPI to which Recipient has given access in order to perform its duties to LAWA.

13. **Federal Non-Disclosure Agreement**.

13.1 Recipient's execution of this Agreement shall not nullify nor affect in any manner any other secrecy or nondisclosure Agreements that the Company has executed or may execute with the United States Government.

Los Angeles World Airports

14. **Privity**.

14.1 Recipient acknowledges that by execution of this Agreement, a privity of contract has been created between LAWA and Recipient and the LAWA is a third party beneficiary to any related agreements entered into by Recipient and its directors, officers, employees, agents, contractors and/or sub-contractors and their related parties.

IN WITNESS WHEREOF, LAWA has caused this Agreement to be executed on its behalf by Executive Director and Recipient has caused the same to be executed by its duly authorized officers, all as of the day, year and place first hereinabove written.

APPROVED AS TO FORM:
CARMEN TRUTANICH, City Attorney

Date _____

By _____
Deputy/Assistant City Attorney

CITY OF LOS ANGELES

By _____
Executive Director
Department of Airports

By _____
Chief Financial Officer
Department of Airports

ATTEST:

By _____
Signature (Secretary)

_____
Print Name

CONTRACTOR'S NAME

By _____
Signature

_____
Print Name

_____
Print Name

[SEAL]

Please mail or deliver the completed Agreement to "6053 W. Century Blvd, Suite 302, Los Angeles, CA 90045" and "Attn: Office of IT Administration – Contract Compliance Office"

2.4. APPENDIX D - NON-DISCLOSURE INDIVIDUAL REFERENCE

LOS ANGELES WORLD AIRPORTS

NON-DISCLOSURE AND CONFIDENTIALITY AGREEMENT

I understand and acknowledge that I am being provided Confidential and Privileged Information (also referred to herein as "CPI"). I also understand and acknowledge that I may be provided Sensitive Security Information (hereinafter referred to as "SSI"), as set forth in paragraph 1.2, herein. The disclosure of the CPI is so that I may undertake certain sensitive work in connection with _____ (hereinafter referred to as "Project"). The individual signatory of this Agreement is also referred to as Recipient. In consideration of my being granted access to Confidential and Privileged Information by Department of Airports, Los Angeles World Airports ("LAWA"), a Department of the City of Los Angeles, a municipal corporation (hereinafter referred to as "City"), I understand and do hereby agree that:

1. **Confidential and Privileged Security Information and SSI**.

1.1 The CPI covered by this Agreement includes, but is not limited to, the following: data, electronic data or systems information, materials, products, specifications, manuals, plans, calculations, drawings and any other non-public information disclosed or submitted, orally, in writing, or by any other media, to Recipient by LAWA. From time to time, LAWA may, at its sole and exclusive option, update the CPI provided to Recipient, and Recipient has the obligation to notify, as may be applicable, its directors, officers, employees, agents, consultants, contractors, and sub-contractors of any type or level of any such updates. Nothing herein shall require LAWA to disclose any of its information unless it so chooses. All documents shall be identified as Confidential and Privileged by markings, notice or otherwise, but Recipient shall assume that all non-public information is Confidential and Privileged.

1.2 CPI may also include SSI as defined in the Transportation Security Administration Rules and Regulations, 49 CFR 1500.1 through 1520.7, and/or Critical Infrastructure Information (hereinafter referred to as "CII") as defined in 6 USC 131, et seq. and any rules or regulation enacted pursuant thereto. All federal laws and regulations shall be complied with for the protection of this information. When Confidential and Privileged Information or CPI is used in this Agreement it also includes SSI and CII.

2 **Obligations of Nondisclosure**.

2.1 LAWA's Confidential and Privileged Information is highly sensitive and vital to the protection of critical transportation infrastructure and public safety, and accordingly it is not for public dissemination or for disclosure to any unauthorized individual. Recipient shall hold CPI in confidence. Recipient shall not use CPI other than for the Project, and shall disclose it only to its officers, directors, employees, agents, consultants, contractors, sub-contractors of any level or type who have a security related need to know and who have executed a copy of LAWA's Non-Disclosure and Confidentiality Agreement. Recipient shall not disclose, publish or otherwise reveal any Confidential and Privileged Information to any other party whatsoever except with the specific prior written authorization of LAWA. Recipient also agrees that, from the date hereof and until such time as the CPI is no longer considered Confidential and Privileged Information by LAWA or the United States Government, Recipient will hold and treat the CPI in the strictest confidence and will not:

(a) Except as required by law, directly or indirectly disclose or permit anyone to disclose any CPI to any other person, who is not a party to LAWA's Non-Disclosure and Confidentiality Agreement authorizing their access to and use of such information (and in the case of a person who is a party to LAWA's Non-Disclosure and Confidentiality Agreement disclosure will only be made to the extent that the information is required for use on a need-to-know basis), without the prior written consent of the Executive Director of City's Department of Airports; or,

Los Angeles World Airports

(b) Make copies of documents or electronic data, or any portion thereof, containing CPI for distribution outside the contract team without the prior written consent of the Executive Director of City's Department of Airports.

3. **Protection of Information**.

3.1 I, the Recipient, agree to maintain the security of all documents, working papers, designs, and other materials related to the CPI, in a manner consistent with LAWA security policy, and will password-protect all such information stored in the electronic form.

3.2 If I receive a subpoena, discovery request, Court Order, Freedom of Information Request ("FOIA"), California Public Records Act ("CPRA") Request, or any other request or demand authorized by law (hereinafter referred to as "Demand") seeking disclosure of Confidential and Privileged Information, I shall immediately notify LAWA of such Demand and foreword all Demands to the Los Angeles City Attorney's Office, Airport Division, located at 1 World Way, Room 104, Los Angeles, California 90045. I shall assert all federal and state privileges available to any public entity within the state of my principal place of business and the State of California. I will take all legal steps necessary to protect the CPI from improper disclosure and fully cooperate in LAWA's efforts to assure that confidential treatment will be afforded the CPI. I shall only disclose that which a Court of competent jurisdiction has ordered me to disclose.

3.3 If at any time I discover that Confidential and Privileged Information has been inappropriately disclosed, I will immediately report same to LAWA and shall use my best efforts to retrieve any tangible CPI so disclosed. Moreover, I have received a copy of the LAWA Office of Information Security's External Party Information Disclosure Policy. I have read and understand this policy and agree to abide by the requirements found within this policy. I further agree to promptly report all violations or suspected violations of LAWA's information security policies to the IMTG - Office of Information Security at 424-646-7000.

4. **Return of Information**.

4.1 Upon the earlier of either LAWA's written request or the completion of my need for such information, any and all CPI obtained by me and all copies thereof, and all writings, electronic media, and materials describing, analyzing, referencing or containing any Confidential and Privileged Security Information and all copies thereof, shall be promptly delivered by me to LAWA at my expense, within ten (10) calendar days of such request. At my option, and with LAWA's written authorization, any documents or other media developed by me containing CPI may be destroyed by shredding by me. I shall provide a written certificate to LAWA regarding destruction within five (5) calendar days thereafter.

5. **Terms/Conditions**.

5.1 I, the Recipient, also agree to take all reasonable precautions to assure that LAWA's internal information, or information that has been entrusted to me by LAWA, will not be disclosed to unauthorized persons. At the end of my employment or contract with LAWA, I agree to return to LAWA all information to which I have had access as a result of my position with LAWA. I further understand that my obligations under this Agreement will be in perpetuity or until such time that I am expressly released, in writing, by LAWA.

5.2 I may use the Confidential and Privileged Information only for the purpose of providing to LAWA the services and products called for by any contract in which I am a contractor, sub-contractor, or employee thereof, in which Confidential and Privileged Information is disclosed or released directly or indirectly to me by LAWA. I understand that I am not authorized to use this information for my own purposes,

Los Angeles World Airports

nor am I at liberty to provide this information to third parties without the express written consent of the Executive Director of City's Department of Airports or her designee.

5.3 I acknowledge that the unauthorized disclosure and handling of the Confidential and Privileged Information could cause substantial damage to Public Safety and Security and significantly endanger LAWA, its facilities, its patrons and the general public and could result in civil or criminal fines, penalties and/or monetary damages.

5.4 I acknowledge that the obligations of confidence required hereunder are extraordinary and unique and are vital to the security and well-being of LAWA, its customers, facilities, and the general public, and that damages at law may be an inadequate remedy for any breach, or threatened breach, of this Agreement and that LAWA shall be entitled, in addition to all other rights or remedies, to seek such restraining orders and injunctions as it may deem appropriate for any such breach prohibiting disclosure of information in breach of this Agreement, without being required to show any actual damage or to post any bond or other security and Recipient consents thereto. I understand and agree that the City, LAWA, or the United States Government may seek additional remedies available to enforce this Agreement and/or prevent the disclosure of Confidential and Privileged, including but not limited to, imposition of civil penalties, and any other enforcement or corrective action.

5.5 If I violate the terms or conditions of this Agreement, such violation may result in civil penalty against it pursuant to the United States authorities under 49 U.S.C. 46301 and 49 CFR Part 1520 or other federal or state statutes or take other enforcement or corrective action.

5.6 I hereby assign to LAWA all royalties, remunerations and emoluments that have resulted, will result, or may result from any disclosure, publication or revelation of Confidential and Privileged Information not consistent with the terms of this Agreement. In addition to the above herein contained, notwithstanding any other damages, royalties, remunerations, and/or emoluments recoverable under this Agreement and/or any contract between me and LAWA that has Confidential and Privileged Information being disclosed to me by LAWA, I shall be responsible to LAWA, as additional compensation, in the amount of Five Thousand Dollars ($5,000) for each individual non-authorized disclosure of Confidential and Privileged Information.

6. **No License**.

6.1 Nothing contained herein shall be construed as granting or conferring any rights by license or otherwise in any Confidential and Privileged Information. It is understood and agreed that neither party solicits any change in the organization, business practice, service, or products of the other party, and that the disclosure of CPI shall not be construed as evidencing any intent by a party to purchase any products or services of the other party, nor as an encouragement to expend funds in development or research efforts. Confidential and Privileged Information may pertain to prospective or unannounced services or facilities.

7 **Governing Law and Equitable Relief**.

7.1 This Agreement shall be governed and construed in accordance with the laws of the State of California. I consent to the exclusive jurisdiction of the appropriate United States Federal Court located within the County of Los Angeles, California or the Los Angeles Superior Court located in the Southwest Judicial District for any dispute arising out of this Agreement. I agree that in the event of any breach or threatened breach by me, LAWA may, in addition to any other legal remedies which may be available, seek such equitable relief as may be necessary to protect it against any such breach or threatened breach.

Los Angeles World Airports

8. **Severability**.

8.1 Each provision of this Agreement is severable. If a court should find any provision of this Agreement to be unenforceable, all other provisions of this Agreement shall remain in full force and effect.

9. **No Implied Waiver**.

9.1 Either party's failure to insist in any one or more instances upon strict performance by the other party of any term or terms of this Agreement shall not be construed as a waiver of any continuing or subsequent failure to perform or delay in performance of any term hereof.

9.2 By granting me access to information in this context, LAWA does not waive any statutory or common law evidentiary privileges or protections that it may assert in any administrative or judicial proceeding to protect Confidential and Privileged Information to which I have been given access in order to perform my duties to LAWA.

10. **Privity**.

10.1 I acknowledge that by execution of this Agreement, a privity of contract has been created between LAWA and me.

Recipient's Printed Name	Recipient's Title
Recipient's Division/Contracting Company	Recipient's Business Telephone
Recipient's Signature	Date

Please mail or deliver the completed Agreement to "6053 W. Century Blvd, Suite 302, Los Angeles, CA 90045" and "Attn: Office of IT Administration – Contract Compliance Office"

2.5. APPENDIX E - SSI SECURITY INFORMATION REFERENCE

2.5.1. Code of Federal Regulations 49 CFR Part 15

TITLE 49--TRANSPORTATION
Subtitle A--Office of the Secretary of Transportation
PART 15. PROTECTION OF SENSITIVE SECURITY INFORMATION

Sec.

Sec. 15.1 Scope.

(a) Applicability. This part governs the maintenance, safeguarding, and disclosure of records and information that the Secretary of DOT has determined to be Sensitive Security Information, as defined in Sec. 15.5. This part does not apply to the maintenance, safeguarding, or disclosure of classified national security information, as defined by Executive Order 12968, or to other sensitive unclassified information that is not SSI, but that nonetheless may be exempt from public disclosure under the Freedom of Information Act. In addition, in the case of information that has been designated as critical infrastructure information under section 214 of the Homeland Security Act, the receipt, maintenance, or disclosure of such information by a Federal agency or employee is governed by section 214 and any implementing regulations, not by this part.

(b) Delegation. The authority of the Secretary under this part may be further delegated within DOT.

Sec. 15.3 Terms used in this part.

In addition to the terms in Sec. 15.3 of this chapter, the following terms apply in this part:

Administrator means the Under Secretary of Transportation for Security referred to in 49 U.S.C. 114(b), or his or her designee.

Coast Guard means the United States Coast Guard.

Covered person means any organization, entity, individual, or other person described in Sec. 15.7. In the case of an individual, covered person includes any individual applying for employment in a position that would be a covered person, or in training for such a position, regardless of whether that individual is receiving a wage, salary, or other form of payment. Covered person includes a person applying for certification or other form of approval that, if granted, would make the person a covered person described in Sec. 15.7.

DHS means the Department of Homeland Security and any directorate, bureau, or other component within the Department of Homeland Security, including the United States Coast Guard.

DOT means the Department of Transportation and any operating administration, entity, or office within the Department of Transportation, including the Saint Lawrence Seaway Development Corporation and the Bureau of Transportation Statistics.

Federal Flight Deck Officer means a pilot participating in the Federal Flight Deck Officer Program under 49 U.S.C. 44921 and implementing regulations.

Maritime facility means any facility as defined in 33 CFR part 101.

Record includes any means by which information is preserved, irrespective of format, including a book, paper, drawing, map, recording, tape, film, photograph, machine-readable material, and any information stored in an electronic format. The term record also includes any draft, proposed, or recommended change to any record.

Security contingency plan means a plan detailing response procedures to address a transportation security incident, threat assessment, or specific threat against transportation, including details of preparation, response, mitigation, recovery, and reconstitution procedures, continuity of government, continuity of transportation operations, and crisis management.

Security program means a program or plan and any amendments developed for the security of the following, including any comments, instructions, or implementing guidance:

(1) An airport, aircraft, or aviation cargo operation;

(2) A maritime facility, vessel, or port area; or

(3) A transportation-related automated system or network for information processing, control, and communications.

Security screening means evaluating a person or property to determine whether either poses a threat to security.

SSI means sensitive security information, as described in Sec. 15.5.

Threat image projection system means an evaluation tool that involves periodic presentation of fictional threat images to operators and is used in connection with x-ray or explosives detection systems equipment.

TSA means the Transportation Security Administration.

Vulnerability assessment means any review, audit, or other examination of the security of a transportation infrastructure asset; airport; maritime facility, port area, vessel, aircraft, train, commercial motor vehicle, or pipeline, or a transportation-related automated system or network, to determine its vulnerability to unlawful interference, whether during the conception, planning, design, construction, operation, or decommissioning phase. A vulnerability assessment may include proposed, recommended, or directed actions or countermeasures to address security concerns.

Sec. 15.5 Sensitive security information.

(a) In general. In accordance with 49 U.S.C. 40119(b)(1), SSI is information obtained or developed in the conduct of security activities, including research and development, the disclosure of which the Secretary of DOT has determined would--

(1) Constitute an unwarranted invasion of privacy (including, but not limited to, information contained in any personnel, medical, or similar file);

(2) Reveal trade secrets or privileged or confidential information obtained from any person; or

(3) Be detrimental to transportation safety.

(b) Information constituting SSI. Except as otherwise provided in writing by the Secretary of DOT in the interest of public safety or in furtherance of transportation security, the following information, and records containing such information, constitute SSI:

(1) Security programs and contingency plans. Any security program or security contingency plan issued, established, required, received, or approved by DOT or DHS, including--

(i) Any aircraft operator or airport operator security program or security contingency plan under this chapter;

(ii) Any vessel, maritime facility, or port area security plan required or directed under Federal law;

(iii) Any national or area security plan prepared under 46 U.S.C. 70103; and

(iv) Any security incident response plan established under 46 U.S.C. 70104.

(2) Security Directives. Any Security Directive or order--

(i) Issued by TSA under 49 CFR 1542.303, 1544.305, or other authority;

(ii) Issued by the Coast Guard under the Maritime Transportation Security Act, 33 CFR part 6, or 33 U.S.C. 1221 et seq. related to maritime security; or

(iii) Any comments, instructions, and implementing guidance pertaining thereto.

(3) Information Circulars. Any notice issued by DHS or DOT regarding a threat to aviation or maritime transportation, including any--

(i) Information Circular issued by TSA under 49 CFR 1542.303 or 1544.305, or other authority; and

(ii) Navigation or Vessel Inspection Circular issued by the Coast Guard related to maritime security.

(4) Performance specifications. Any performance specification and any description of a test object or test procedure, for--

(i) Any device used by the Federal government or any other person pursuant to any aviation or maritime transportation security requirements of Federal law for the detection of any weapon, explosive, incendiary, or destructive device or substance; and

(ii) Any communications equipment used by the Federal government or any other person in carrying out or complying with any aviation or maritime transportation security requirements of Federal law.

(5) Vulnerability assessments. Any vulnerability assessment directed, created, held, funded, or approved by the DOT, DHS, or that will be provided to DOT or DHS in support of a Federal security program.

(6) Security inspection or investigative information. (i) Details of any security inspection or investigation of an alleged violation of aviation or maritime transportation security requirements of Federal law that could reveal a security vulnerability, including the identity of the Federal special agent or other Federal employee who conducted the inspection or audit.

(ii) In the case of inspections or investigations performed by TSA, this includes the following information as to events that occurred within 12 months of the date of release of the information: the name of the airport where a violation occurred, the airport identifier in the case number, a description of the violation, the regulation allegedly violated, and the identity of any aircraft operator in connection with specific locations or specific security procedures. Such information

will be released after the relevant 12-month period, except that TSA will not release the specific gate or other location on an airport where an event occurred, regardless of the amount of time that has passed since its occurrence. During the period within 12 months of the date of release of the information, TSA may release summaries of an aircraft operator's, but not an airport operator's, total security violations in a specified time range without identifying specific violations or locations. Summaries may include total enforcement actions, total proposed civil penalty amounts, number of cases opened, number of cases referred to TSA or FAA counsel for legal enforcement action, and number of cases closed.

(7) Threat information. Any information held by the Federal government concerning threats against transportation or transportation systems and sources and methods used to gather or develop threat information, including threats against cyber infrastructure.

(8) Security measures. Specific details of aviation or maritime transportation security measures, both operational and technical, whether applied directly by the Federal government or another person, including--

(i) Security measures or protocols recommended by the Federal government;

(ii) Information concerning the deployments, numbers, and operations of Coast Guard personnel engaged in maritime security duties and Federal Air Marshals, to the extent it is not classified national security information; and

(iii) Information concerning the deployments and operations of Federal Flight Deck Officers, and numbers of Federal Flight Deck Officers aggregated by aircraft operator.

(9) Security screening information. The following information regarding security screening under aviation or maritime transportation security requirements of Federal law:

(i) Any procedures, including selection criteria and any comments, instructions, and implementing guidance pertaining thereto, for screening of persons, accessible property, checked baggage, U.S. mail, stores, and cargo, that is conducted by the Federal government or any other authorized person.

(ii) Information and sources of information used by a passenger or property screening program or system, including an automated screening system.

(iii) Detailed information about the locations at which particular screening methods or equipment are used, only if determined by TSA to be SSI.

(iv) Any security screener test and scores of such tests.

(v) Performance or testing data from security equipment or screening systems.

(vi) Any electronic image shown on any screening equipment monitor, including threat images and descriptions of threat images for threat image projection systems.

(10) Security training materials. Records created or obtained for the purpose of training persons employed by, contracted with, or acting for the Federal government or another person to carry out

any aviation or maritime transportation security measures required or recommended by DHS or DOT.

(11) Identifying information of certain transportation security personnel. (i) Lists of the names or other identifying information that identify persons as--

(A) Having unescorted access to a secure area of an airport or a secure or restricted area of a maritime facility, port area, or vessel or;

(B) Holding a position as a security screener employed by or under contract with the Federal government pursuant to aviation or maritime transportation security requirements of Federal law, where such lists are aggregated by airport;

(C) Holding a position with the Coast Guard responsible for conducting vulnerability assessments, security boardings, or engaged in operations to enforce maritime security requirements or conduct force protection;

(D) Holding a position as a Federal Air Marshal; or

(ii) The name or other identifying information that identifies a person as a current, former, or applicant for Federal Flight Deck Officer.

(12) Critical aviation or maritime infrastructure asset information. Any list identifying systems or assets, whether physical or virtual, so vital to the aviation or maritime transportation system that the incapacity or destruction of such assets would have a debilitating impact on transportation security, if the list is--

(i) Prepared by DHS or DOT; or

(ii) Prepared by a State or local government agency and submitted by the agency to DHS or DOT.

(13) Systems security information. Any information involving the security of operational or administrative data systems operated by the Federal government that have been identified by the DOT or DHS as critical to aviation or maritime transportation safety or security, including automated information security procedures and systems, security inspections, and vulnerability information concerning those systems.

(14) Confidential business information. (i) Solicited or unsolicited proposals received by DHS or DOT, and negotiations arising therefrom, to perform work pursuant to a grant, contract, cooperative agreement, or other transaction, but only to the extent that the subject matter of the proposal relates to aviation or maritime transportation security measures;

(ii) Trade secret information, including information required or requested by regulation or Security Directive, obtained by DHS or DOT in carrying out aviation or maritime transportation security responsibilities; and

(iii) Commercial or financial information, including information required or requested by regulation or Security Directive, obtained by DHS or DOT in carrying out aviation or maritime transportation security responsibilities, but only if the source of the information does not customarily disclose it to the public.

(15) Research and development. Information obtained or developed in the conduct of research related to aviation or maritime transportation security activities, where such research is approved, accepted, funded, recommended, or directed by the DHS or DOT, including research results.

(16) Other information. Any information not otherwise described in this section that TSA determines is SSI under 49 U.S.C. 114(s) or that the Secretary of DOT determines is SSI under 49 U.S.C. 40119. Upon the request of another Federal agency, the Secretary of DOT may designate as SSI information not otherwise described in this section.

(c) Loss of SSI designation. The Secretary of DOT may determine in writing that information or records described in paragraph (b) of this section do not constitute SSI because they no longer meet the criteria set forth in paragraph (a) of this section.

Sec. 15.7 Covered persons.

Persons subject to the requirements of part 15 are:

(a) Each airport operator and aircraft operator subject to the requirements of Subchapter C of this title.

(b) Each indirect air carrier, as defined in 49 CFR 1540.5.

(c) Each owner, charterer, or operator of a vessel, including foreign vessel owners, charterers, and operators, required to have a security plan under Federal or International law.

(d) Each owner or operator of a maritime facility required to have a security plan under the Maritime Transportation Security Act, (Pub. L. 107-295), 46 U.S.C. 70101 et seq., 33 CFR part 6, or 33 U.S.C. 1221 et seq.

(e) Each person performing the function of a computer reservation system or global distribution system for airline passenger information.

(f) Each person participating in a national or area security committee established under 46 U.S.C. 70112, or a port security committee.

(g) Each industry trade association that represents covered persons and has entered into a non-disclosure agreement with the DHS or DOT.

(h) DHS and DOT.

(i) Each person conducting research and development activities that relate to aviation or maritime transportation security and are approved, accepted, funded, recommended, or directed by DHS or DOT.

(j) Each person who has access to SSI, as specified in Sec. 15.11.

(k) Each person employed by, contracted to, or acting for a covered person, including a grantee of DHS or DOT, and including a person formerly in such position.

(l) Each person for which a vulnerability assessment has been directed, created, held, funded, or approved by the DOT, DHS, or that has prepared a vulnerability assessment that will be provided to DOT or DHS in support of a Federal security program.

(m) Each person receiving SSI under Sec. 1520.15(d) or (e).

Sec. 15.9 Restrictions on the disclosure of SSI.

(a) Duty to protect information. A covered person must--

(1) Take reasonable steps to safeguard SSI in that person's possession or control from unauthorized disclosure. When a person is not in physical possession of SSI, the person must store it a secure container, such as a locked desk or file cabinet or in a locked room.

(2) Disclose, or otherwise provide access to, SSI only to covered persons who have a need to know, unless otherwise authorized in writing by TSA, the Coast Guard, or the Secretary of DOT.

(3) Refer requests by other persons for SSI to TSA or the applicable component or agency within DOT or DHS.

(4) Mark SSI as specified in Sec. 15.13.

(5) Dispose of SSI as specified in Sec. 15.19.

(b) Unmarked SSI. If a covered person receives a record containing SSI that is not marked as specified in Sec. 1520.13, the covered person must--

(1) Mark the record as specified in Sec. 15.13; and

(2) Inform the sender of the record that the record must be marked as specified in Sec. 15.13.

(c) Duty to report unauthorized disclosure. When a covered person becomes aware that SSI has been released to unauthorized persons, the covered person must promptly inform TSA or the applicable DOT or DHS component or agency.

(d) Additional requirements for critical infrastructure information. In the case of information that is both SSI and has been designated as critical infrastructure information under section 214 of the

Homeland Security Act, any covered person who is a Federal employee in possession of such information must comply with the disclosure restrictions and other requirements applicable to such information under section 214 and any implementing regulations.

Sec. 15.11 Persons with a need to know.

(a) In general. A person has a need to know SSI in each of the following circumstances:

(1) When the person requires access to specific SSI to carry out transportation security activities approved, accepted, funded, recommended, or directed by DHS or DOT.

(2) When the person is in training to carry out transportation security activities approved, accepted, funded, recommended, or directed by DHS or DOT.

(3) When the information is necessary for the person to supervise or otherwise manage individuals carrying out transportation security activities approved, accepted, funded, recommended, or directed by the DHS or DOT.

(4) When the person needs the information to provide technical or legal advice to a covered person regarding transportation security requirements of Federal law.

(5) When the person needs the information to represent a covered person in connection with any judicial or administrative proceeding regarding those requirements.

(b) Federal employees, contractors, and grantees. (1) A Federal employee has a need to know SSI if access to the information is necessary for performance of the employee's official duties.

(2) A person acting in the performance of a contract with or grant from DHS or DOT has a need to know SSI if access to the information is necessary to performance of the contract or grant.

(c) Background check. The Secretary of DOT may make an individual's access to the SSI contingent upon satisfactory completion of a security background check and the imposition of procedures and requirements for safeguarding SSI that are satisfactory to the Secretary.

(d) Need to know further limited by the DHS or DOT. For some specific SSI, DHS or DOT may make a finding that only specific persons or classes of persons have a need to know.

Sec. 15.13 Marking SSI.

(a) Marking of paper records. In the case of paper records containing SSI, a covered person must mark the record by placing the protective marking conspicuously on the top, and the distribution limitation statement on the bottom, of--

(1) The outside of any front and back cover, including a binder cover or folder, if the document has a front and back cover;

(2) Any title page; and

(3) Each page of the document.

(b) Protective marking. The protective marking is: SENSITIVE SECURITY INFORMATION.

(c) Distribution limitation statement. The distribution limitation statement is:

WARNING: This record contains Sensitive Security Information that is controlled under 49 CFR parts 15 and 1520. No part of this record may be disclosed to persons without a "need to know", as defined in 49 CFR parts 15 and 1520, except with the written permission of the Administrator of the Transportation Security Administration or the Secretary of Transportation. Unauthorized release may result in civil penalty or other action. For U.S. government agencies, public disclosure is governed by 5 U.S.C. 552 and 49 CFR parts 15 and 1520.

(d) Other types of records. In the case of non-paper records that contain SSI, including motion picture films, videotape recordings, audio recording, and electronic and magnetic records, a covered person must clearly and conspicuously mark the records with the protective marking and the distribution limitation statement such that the viewer or listener is reasonably likely to see or hear them when obtaining access to the contents of the record.

Sec. 15.15 SSI disclosed by DOT.

(a) In general. Except as otherwise provided in this section, and notwithstanding the Freedom of Information Act (5 U.S.C. 552), the Privacy Act (5 U.S.C. 552a), and other laws, records containing SSI are not available for public inspection or copying, nor does DOT release such records to persons without a need to know.

(b) Disclosure under the Freedom of Information Act and the Privacy Act. If a record contains both SSI and information that is not SSI, DOT, on a proper Freedom of Information Act or Privacy Act request, may disclose the record with the SSI redacted, provided the record is not otherwise exempt from disclosure under the Freedom of Information Act or Privacy Act.

(c) Disclosures to committees of Congress and the General Accounting Office. Nothing in this part precludes DOT from disclosing SSI to a committee of Congress authorized to have the information or to the Comptroller General, or to any authorized representative of the Comptroller General.

(d) Disclosure in enforcement proceedings. (1) In general. The Secretary of DOT may provide SSI to a person in the context of an administrative enforcement proceeding when, in the sole discretion of the Secretary, access to the SSI is necessary for the

person to prepare a response to allegations contained in a legal enforcement action document issued by DOT.

(2) Security background check. Prior to providing SSI to a person under paragraph (d)(1) of this section, the Secretary of DOT may require the individual or, in the case of an entity, the individuals representing the entity, and their counsel, to undergo and satisfy, in the judgment of the Secretary of DOT, a security background check.

(e) Other conditional disclosure. The Secretary of DOT may authorize a conditional disclosure of specific records or information that constitute SSI upon the written determination by the Secretary that disclosure of such records or information, subject to such limitations and restrictions as the Secretary may prescribe, would not be detrimental to transportation safety.

(f) Obligation to protect information. When an individual receives SSI pursuant to paragraph (d) or (e) of this section that individual becomes a covered person under Sec. 15.7 and is subject to the obligations of a covered person under this part.

(g) No release under FOIA. When DOT discloses SSI pursuant to paragraphs (b) through (e) of this section, DOT makes the disclosure for the sole purpose described in that paragraph. Such disclosure is not a public release of information under the Freedom of Information Act.

(h) Disclosure of Critical Infrastructure Information. Disclosure of information that is both SSI and has been designated as critical infrastructure information under section 214 of the Homeland Security Act is governed solely by the requirements of section 214 and any implementing regulations.

Sec. 15.17 Consequences of unauthorized disclosure of SSI.

Violation of this part is grounds for a civil penalty and other enforcement or corrective action by DOT, and appropriate personnel actions for Federal employees. Corrective action may include issuance of an order requiring retrieval of SSI to remedy unauthorized disclosure or an order to cease future unauthorized disclosure.

Sec. 15.19 Destruction of SSI.

(a) DOT. Subject to the requirements of the Federal Records Act (5 U.S.C. 105), including the duty to preserve records containing documentation of a Federal agency's policies, decisions, and essential transactions, DOT destroys SSI when no longer needed to carry out the agency's function.

(b) Other covered persons. (1) In general. A covered person must destroy SSI completely to preclude recognition or reconstruction of the information when the covered person no longer needs the SSI to carry out transportation security measures.

(2) Exception. Paragraph (b)(1) of this section does not require a State or local government agency to destroy information that the agency is required to preserve under State or local law.

2.6. APPENDIX F - IT ROOM ACCESS POLICY REFERENCE

POLICY STATEMENT

2.6.1. Physical Security

All personnel who access LAWA IT rooms shall protect IT resources from unauthorized use and malicious acts that could result in the loss of information and/or damage to IT system systems and supporting equipment.

All IMTG facilities shall be physically secured with ACAMS card reader access. Additionally, the door-lock cylinders shall be secured with IMTG dedicated keys. All facilities shall be monitored with closed-circuit surveillance cameras. Existing facilities without these controls are to have them implemented within the next three years.

Under no circumstance should any person enter an IMTG facility unless "authorized", "incident-qualified", "accompanied" or "escorted" (as defined below) regardless of whether a door is open or any other scenario exists which might permit physical entry.

2.6.2. Levels of Access

1. Authorized

Only approved LAWA staff, contractors, and service providers whose responsibilities require that they perform ongoing functions within specific IMTG facilities will be provided constant and unescorted entry. Such personnel will be considered "authorized" within this policy.

"Authorized" status will last as long as there is a need, the LAWA I.D. badge is current, and the "authorized" person's conduct is in good standing.

"Authorized" access may also be also be granted on a temporary basis for personnel requiring short term access.

2. Incident Qualified

All Emergency Service personnel, such as police, fire, and emergency response services as-well-as any incident or emergency support personnel will be considered "incident qualified" for the purpose of responding to an incident or an emergency.

Emergency services personnel will be provided access. Access for support personnel will also be provided but limited to the duration of the emergency or incident.

3. Accompanied/Escorted

Any person who is other than "authorized" or "incident qualified" will be either "accompanied" or "escorted" by an authorized person. An "accompanied" person is one who has a valid LAWA identification badge

and just needs access to facilities for a short duration. An "escorted" person is one who does not have a valid LAWA identification badge.

The authorized person should closely monitor the activities of the "accompanied" or "escorted" person at all times.

2.6.3. REQUESTS FOR IT Facility Access

1. Tenant Requests

Tenant requests for access must be made by the tenant and not by the tenant's contractor because LAWA only has a contractual agreement with the tenant and not the tenant's contractor.

2. Contractor Requests

Tenant contractor access requests must be made by the tenant. LAWA non-IT contractor requests must be made by the LAWA divisions. LAWA IT contractor requests must be made by the engineer.

3. One-time Access Requests

Personnel requesting a one-time or very limited access should contact the LAWA IT Service Desk at 424-646-9000, or email at ITServiceDesk@lawa.org for an "accompaniment" or "escort". Request should be submitted one week in advance of access date.

4. Multiple-time Access Requests

Personnel requesting multiple-day access should submit an application to the LAWA Security Access Analysis Unit (SAAU) SAAUnit@lawa.org who will review the application and then forward IT facilities requests to IMTG for review and approval.

Tenants and contractors must submit their associated contract name and number, work description, duration of their request, and contact information as part of their application request. Contractors must provide the contact information of the tenant that is sponsoring their work.

2.6.4. ISSUANCE OF KEYS

Only "authorized" personnel on a need-to-have-basis will be able to be given keys to access IT facilities for the duration of their project subject to initial and on-going review.

LAWA contractors and service providers may be temporarily assigned a key for the duration of their project.

2.6.5. EXISTING FACILITIES

LAWA has multiple IT facility categories:

1. Rooms controlled by IMTG directly accessible from a common corridor:
   - Primarily for LAWA active IT equipment and cabling
   - Secured with only a key
   - Secured with a card reader

2. Rooms controlled by IMTG accessible through a space controlled by others:
   - Primarily for LAWA active IT equipment and cabling
   - Secured with only a key
   - Secured with a card reader

3. Rooms shared with other LAWA Utilities – Electrical, Mechanical, Fire Life Safety:
   - Secondarily for LAWA active IT equipment and cabling
   - Secured with only a key
   - Secured with a card reader

4. Rooms designated as Tenant Common-Use Wiring closets (TCWC's)
   - Primarily for tenant cross-connects
   - Secured with only a key
   - Accessed with a card reader through another space

5. Data Centers
   - Primarily for LAWA servers
   - Secured with a card reader
   - Limited restricted access
   - Site-log sign in required

6. Minimum Points on Entry (MPOE)
   - Primarily for service provider building entry and LAWA active equipment
   - Connects
   - Secured with a card reader

2.6.6. REQUESTS FOR IT EQUIPMENT ACCESS

Requests for keys to access IT equipment cabinets, junction boxes, and patch panels within IT facilities is reviewed on a case-by-case basis.

2.6.7. IT ROOM BEHAVIOR AND RESTRICTIONS

1. Food and beverages are prohibited.

2. Open flames are prohibited unless permitted and under direct supervision by the LAWA Engineering and Facilities Maintenance Division.

3. Electrical circuit breakers are not allowed to be turned off unless pre-approved for a Utility shutdown.

4. Personnel shall not make any changes that would alter or compromise the integrity of IT facilities without the explicit permission of the CTO or his designee.

5. All personnel shall clean up at the end of each day's work. All trash shall be removed from the IT facility and properly disposed of.

2.6.8. ACCESS REVOCATION

Failure to adhere to this policy by LAWA staff, tenants, contractors, and service providers may result in disciplinary action and/or revocation of access to LAWA IT facilities.

2.7. APPENDIX G - CODES, STANDARDS, REGULATIONS

2.7.1. All installations shall comply with the latest National Electric Code, the Los Angeles City Building and Safety Electric Code, and the codes, standards, and methodologies listed below. Except as specified, Standards and practices that prevail and are generally accepted within the industry shall be used to assure the highest quality materials, equipment and workmanship.

2.7.2. All references to model numbers and other pertinent information herein are intended to establish standards of performance, quality and construction only. Equivalent products may be considered if adequate information is submitted to the specifying engineer for approval beforehand.

2.7.3. If there is an apparent conflict between this specification, and any code or standard, then the NEC and City of Los Angeles Building and Safety Codes shall prevail.

Americans with **Disabilities Act** (ADA) of 1992

ANSI/BICSI 006-2015, **Distributed Antenna System** (DAS) Design and Implementation Best Practices

ANSI/BICSI 002-2011, **Data Center Design** and Implementation Best Practices

ANSI/NECA/BICSI 568-2006, Standard for Installing Commercial Building **Telecommunications Cabling**

ANSI/TIA-568-C.0–2009+A1:2010+A2:2012, Generic **Telecommunications Cabling** for Customer Premises

ANSI/TIA-568-C.1–2009+A1:2012, Commercial Building **Telecommunications Cabling** Standard

ANSI/TIA-568-C.2–2009+A1:2010, Balanced **Twisted-Pair Telecommunications Cabling** and Components Standard

ANSI/TIA-568-C.3–2009+A1:2011, **Optical Fiber Cabling** Components Standard

ANSI/TIA-568-C.4–2011, Broadband **Coaxial Cabling** and Components Standard

ANSI/TIA-569-C–2012, Telecommunications **Pathways and Spaces**

ANSI/TIA/EIA-598-C–2005, Optical **Fiber Cable Color Coding**

ANSI/TIA-606-B-2012, **Administration** Standard for Commercial Telecommunications Infrastructure

ANSI/TIA-607-B-2011, Commercial Building **Grounding (Earthing) and Bonding** Requirements for Telecommunications

ANSI/TIA-758-B–2012, Customer-Owned Outside Plant Telecommunications Infrastructure Standard

ANSI/TIA-862-A–2011, **Building Automation Systems** Cabling Standard

ANSI/TIA-942-A-2012, Telecommunications Infrastructure Standard for **Data Centers**

ANSI/TIA-1005-A–2012, Telecommunications Infrastructure Standard for **Industrial Premises**

ANSI/TIA-1152–2009, Requirements for **Field Test Instruments and Measurements** for Balanced Twisted-Pair Cabling

NESC-2012 National **Electrical Safety Code**

NFPA 70, National **Electrical Code** (NEC), 2014

TIA-526-7 (OFSTP-7)-2002+A1:2008, Measurement of **Optical Power Loss** of
Installed Single-Mode Fiber Cable Plant

TIA-526-14-B-2010 (OFSTP-14), **Optical Power Loss Measurements** of Installed Multimode Fiber Cable Plant; IEC 61280-4-1 Edition 2, Fibre-Optic Communications Subsystem Test Procedure- Part 4-1: Installed Cable Plant-Multimode Attenuation Measurement

2.8. APPENDIX H - LESSONS LEARNED

2.8.1. Conduits directly on the ground in potential harm's way of vehicles shall be protected.

A sample of a rigid conduit coupling that has opened due to a lack of protection.

2.8.2. Basements shall not share a common wall with a Maintenance Holes.

A legacy Maintenance Hole with a wall that is shared with a basement is prone to leaks.

2.8.3. Maintenance Holes with empty conduits shall be plugged and conduits with cables shall have cable wraps.

A legacy MH showing empty conduits without duct plugs and inflatable cable wraps leak.

2.8.4. Horizontal cable terminations shall be installed in 34-inch wide equipment cabinets to allow for sufficient vertical cable management.

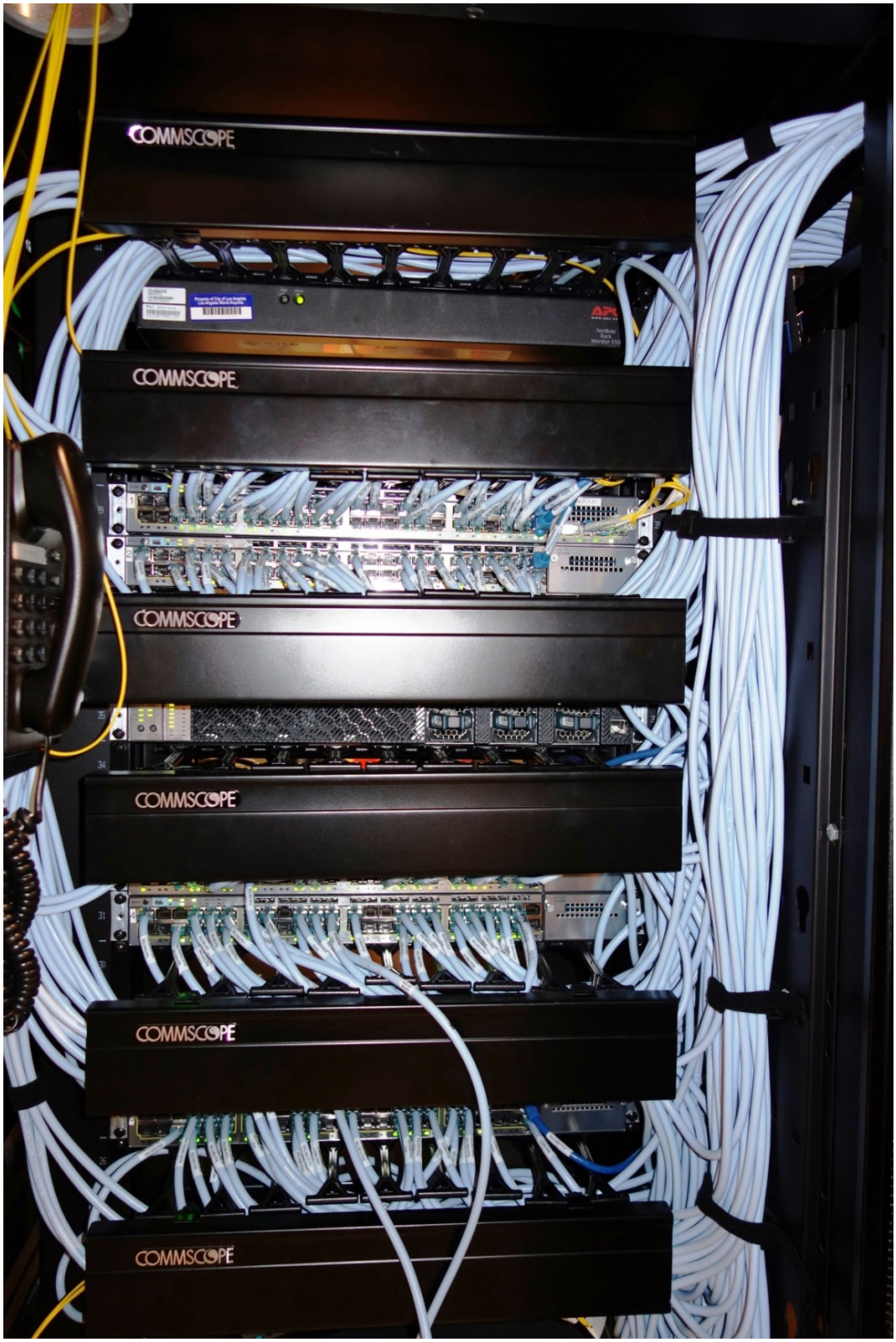

Legacy 28-inch wide cabinets do not have sufficient vertical cable management space for CAT 6A.

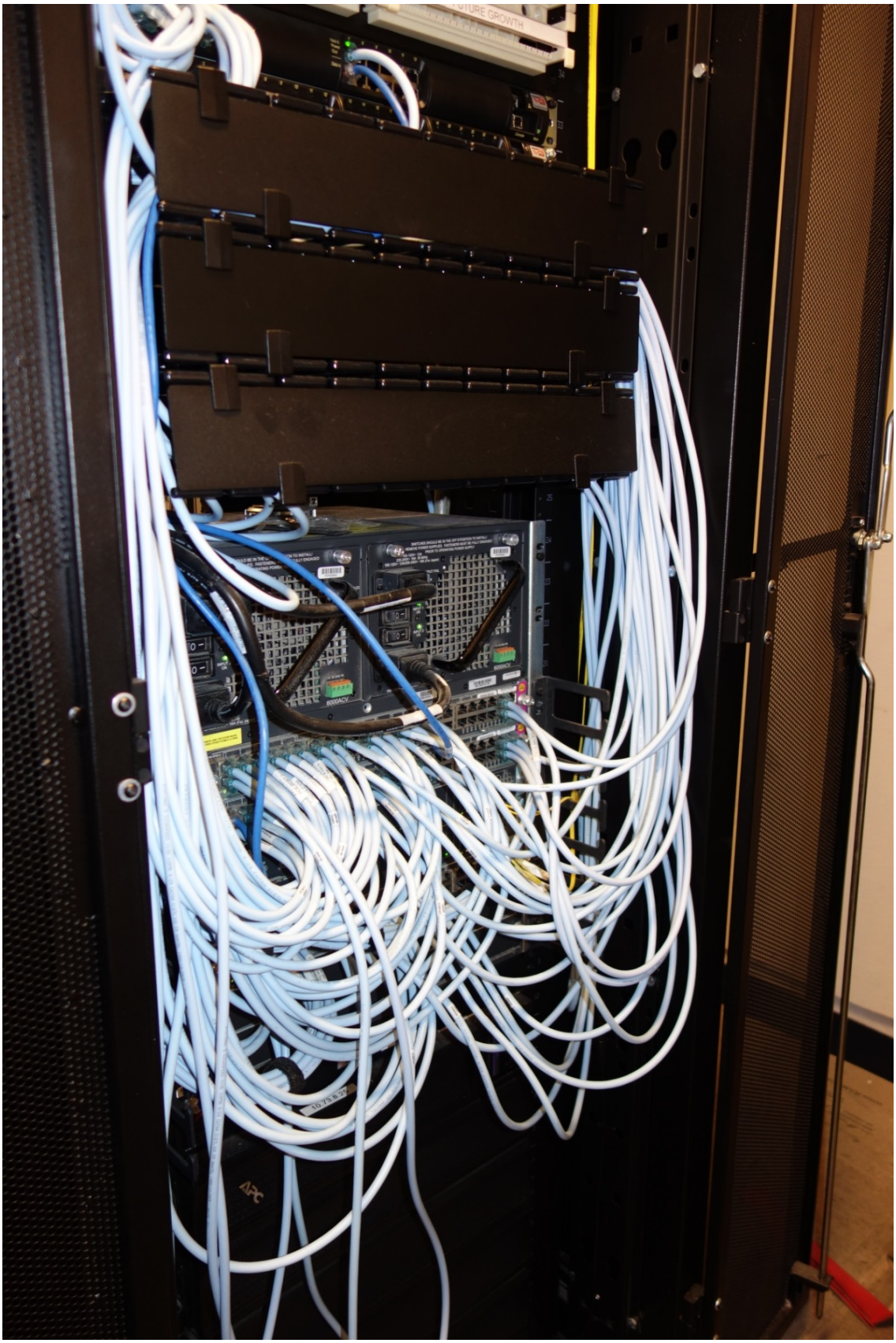

Legacy 28-inch wide cabinets do not have sufficient vertical cable management space for CAT 6A.

2.8.5. Horizontal cable management for CAT 6/6A shall be completed by using angled CAT 6/6A patch panels and 34-inch wide cabinets for Structured Cabling Solutions.

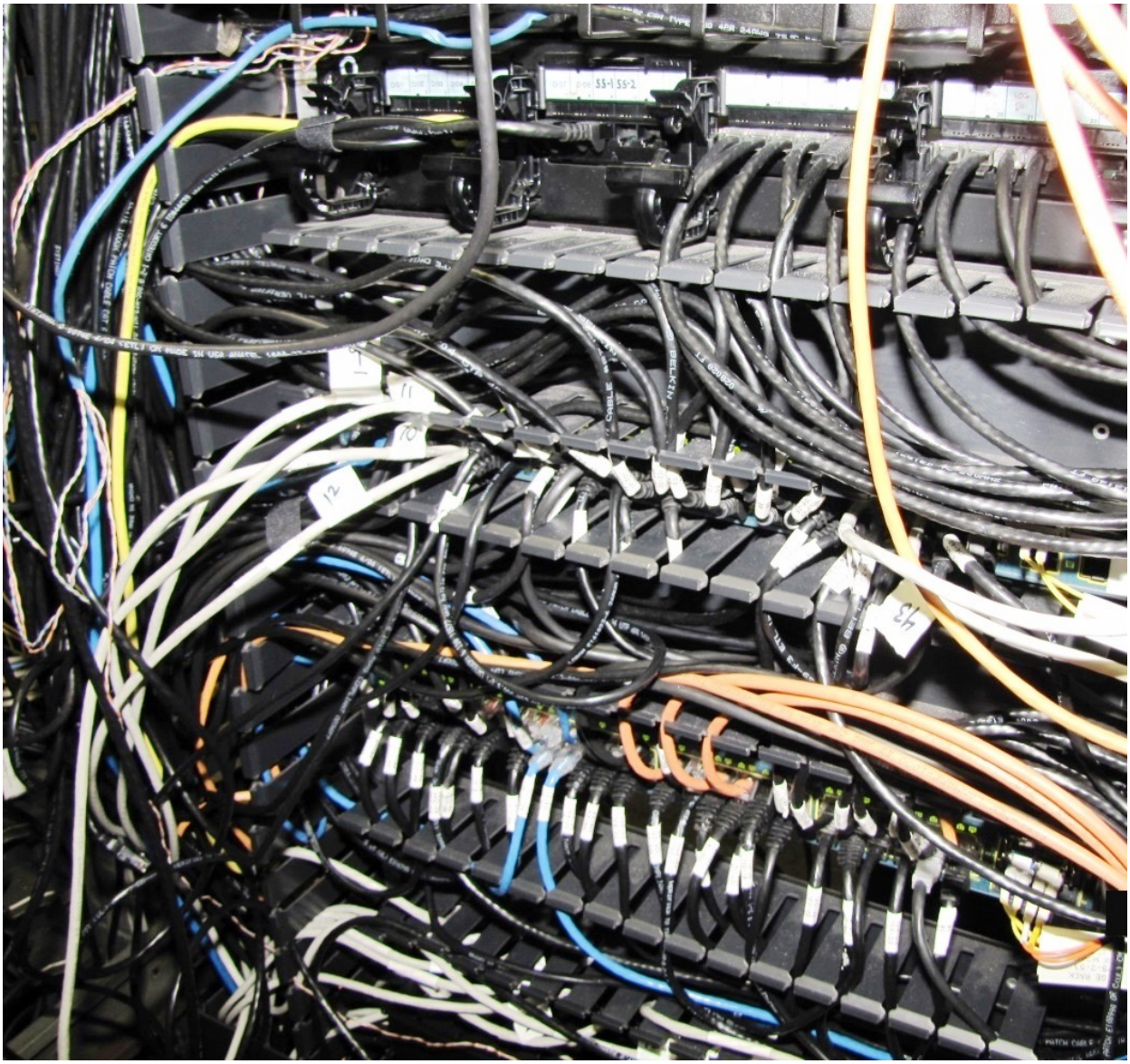

Legacy vertical cable management is not longer the preferred method of managing cables.

2.8.6. Angled CAT 6A patch panels plus wider cabinets eliminate unsightly cable management.

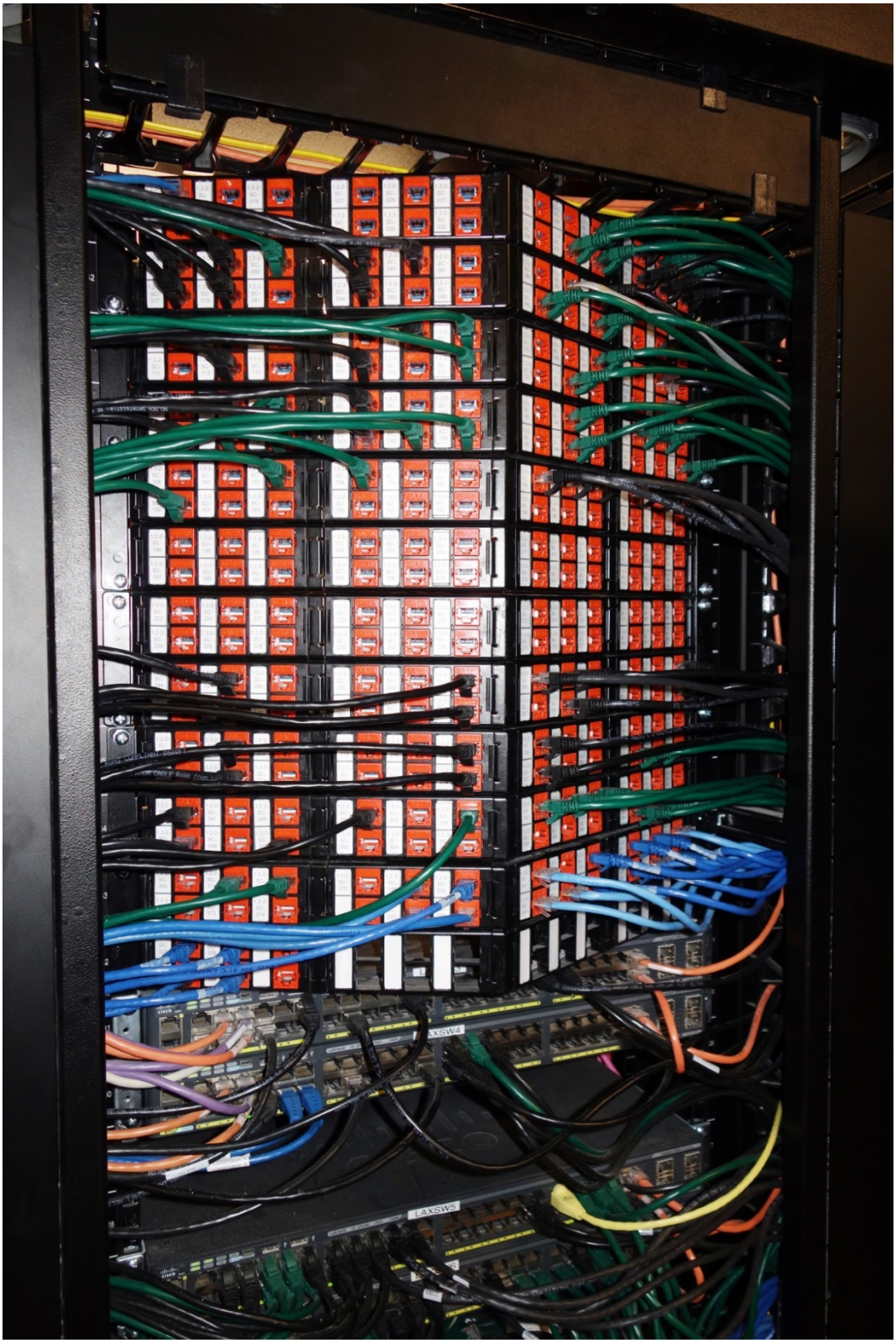

LAWA's new CAT 6A patch panel standard is angled to overcome horizontal cable tangle.

2.8.7. Indoor fiber cable slack shall be coiled up behind patch panels that have been extended off the wall with strut or "Z" brackets.

Legacy fiber slack previously mounted on walls is not coiled up behind patch panels.

2.9. APPENDIX I - CONDUIT FILL CALCULATIONS

SUPERIOR ESSEX

Premises Cable Conduit Fill Quick Reference

Conduit Size	½	¾	1	1¼	1½	2	2½	3	3½	4	5
Conduit Internal Diameter in	0.62	0.82	1.05	1.38	1.61	2.07	2.47	3.07	3.55	4.03	5.05
Conduit Cross-Sectional Area in²	0.30	0.53	0.87	1.51	2.05	3.39	482	7.45	9.96	12.83	20.15
Cable Nominal Diameter	Number of Cables at Maximum Recommended Conduit Fill @ 40% Maximum										
0.10	15	26	44	76	103	171	262	376	504	649	1020
0.13	9	15	26	45	61	101	155	223	298	384	603
0.15	6	11	19	33	46	76	116	167	224	288	453
0.18	4	8	13	23	32	52	80	116	155	200	314
0.20	3	6	11	19	25	42	65	94	126	162	255
0.21	3	6	10	17	23	38	59	85	114	147	231
0.22	3	5	9	15	21	35	54	77	104	134	210
0.23	2	5	8	14	19	32	49	71	95	122	192
0.24	2	4	7	13	18	29	45	65	87	112	177
0.25	1	4	7	12	16	27	41	60	80	103	163
0.26	1	3	6	11	15	25	38	55	74	96	150
0.27	1	3	6	10	14	23	35	51	69	89	139
0.28	1	3	5	9	13	21	33	48	64	82	130
0.29	1	3	5	9	12	20	31	44	59	77	121
0.30	1	2	4	8	11	19	29	41	56	72	113
0.3	1	2	4	7	10	17	27	39	52	67	106
0.32	1	2	4	7	10	16	25	36	49	63	99
0.33	1	1	4	6	9	15	24	34	46	59	93
0.34	1	1	3	6	8	14	22	32	43	56	88
0.35	1	1	3	6	8	13	21	30	41	53	83
0.40	1	1	2	4	6	10	16	23	31	40	63
0.45	1	1	1	3	5	8	12	18	24	32	50
0.50	0	1	1	3	4	6	10	15	20	25	40
0.55	0	1	1	1	3	5	8	12	16	21	33
0.60	0	0	1	1	2	4	7	10	14	18	28
0.65	0	0	1	1	1	4	6	8	11	15	24
0.70	0	0	1	1	1	3	5	7	10	13	20
0.75	0	0	1	1	1	3	4	6	8	11	18
0.80	0	0	0	1	1	2	4	5	7	10	15
0.85	0	0	0	1	1	1	3	5	6	8	14
0.90	0	0	0	1	1	1	3	4	6	8	12
0.95	0	0	0	1	1	1	2	4	5	7	11
1.00	0	0	0	1	1	1	2	3	5	6	10

Rev 7/15 Ed 13.0

Courtesy of and adapted from SuperiorEssex.com 800.551.8948

2.10. APPENDIX J - FIBER OPTIC LOSS BUDGET CALCULATIONS

The following are the instructions to use the attached Calculation Sheet.

2.10.1. 1. Research the transmitter output power and receiver sensitivity and plug these values into item #1.

2.10.2. 2. Plug in 0.6 dB into item #2.

2.10.3. 3. Determine the Loss Budget – [Transmitter Power Output minus Receiver Sensitivity] minus Power Penalties – item #3.

2.10.4. 4. From the Corning catalog, Altos (which you're using) Multimode 62.5 micron fiber has an inherent loss of 3.4 dB/km. Multiply by the total distance and plug this value into item #4.

2.10.5. 5. Connectors are allowed 0.75 dB loss per mated pair. Multiply by the number of mated pairs and plug this value into item #5.

2.10.6. 6. Splices are allowed 0.3 dB per fusion splice – typically 2 splices per mated connector pair. Multiply by the number of splices and plug this value into item #6.

2.10.7. 7. Calculate Insertion Loss - all passive losses (cable, connectors, fusion splices) per circuit – item #8.

2.10.8. 8. Calculate System Performance Margin - Subtract Insertion Loss from Loss Budget – item #9.

LINK LOSS OPTICAL FIBER PERFORMANCE CALCULATION

Project Name: _____ Date: _____

Origin: _____ Destination: _____

A. Calculate Link Loss Budget

0. **Sample** of manufacturer's spec's	System wavelength	1310 nm		
	Optical fiber type: Corning SMF28e+ glass	8.3/125 µm singlemode		
	Average transmitter output	-10.0 dBm		
	Receiver sensitivity (1x10 exp. -9 BER)	-30.0 dBm		
	Receiver dynamic range	-11.0 dB		
1. **System Gain**	Average transmitter power		dBm	
	- Receiver sensitivity		dBm	
	= ***System Gain***			0.0 dB
2. **Power Penalties**	Operating margin (none stated)		dB	
	+ Receiver power penalties (none) stated		dB	
	+ Repair margin (2 fusion splices at 0.3 dB each)		dB	
	= ***Total Power Penalties***			0.0 dB
3. **Link Loss Budget**	System gain (#1 above)			
	- Power penalties (#2 above)			
	= ***Total Link Loss Budget***			0.0 dB

B. Calculate Passive Cable System Attenuation

4. **Optical fiber loss at operating wavelength**	Cable distance	dB	
	X (Corning SMF28e+ = 0.4 dB/km)	0.4 dB/km	
	= ***Total Optical Fiber Loss***		0.0 dB
5. **Connector loss (Exclude Xmtr and Rcvr connectors)**	Connector pair loss (per standard)	0.75dB	
	X Number of connector pairs		
	= ***Total Connector Loss***		0.0 dB
6. **Optical splice loss**	Individual splice loss	0.3 dB	
	X Number of splices		
	= ***Total Splice Loss***		0.0 dB
7. **Other Component Loss**	Total components (none)	0.0 dB	
8. **Total Passive System Attenuation**	Total optical fiber loss (#4 above)	dB	
	+ Total connector loss (#5 above)	dB	
	+ Total splice loss (#6 above)	dB	
	+ Total components (#7 above)	0.0 dB	
	= ***Total System Attenuation***		0.0 dB

C. Verify System Performance Margin

9. **Verification of adequate power to the system**	Total Link loss budget (#3 above)	dB	
	- Total Passive cable system attenuation (#8 above)	dB	
	= ***System Performance Margin***		0.0 dB

Link Loss Budget Sheet. Source: BICSI.

2.11. APPENDIX K - 2014 NEC CODE ARTICLES

Contents

Table of Contents from the 2014 NEC Handbook. Source: National Fire Protection Association.

Chapter 4 Equipment for General Use 403

Chapter 5 Special Occupancies 569

Chapter 6 Special Equipment 783

Table of Contents from the 2014 NEC Handbook. Source: National Fire Protection Association.

Table of Contents from the 2014 NEC Handbook. Source: National Fire Protection Association.

2.12. APPENDIX L - CSI MASTER FORMAT DIVISION NUMBERS

27 00 00 Communications

27 01 00 Operation and Maintenance of Communications Systems

27 01 10 Operation and Maintenance of Structured Cabling and Enclosures
27 01 20 Operation and Maintenance of Data Communications
27 01 30 Operation and Maintenance of Voice Communications
27 01 40 Operation and Maintenance of Audio-Video Communications
27 01 50 Operation and Maintenance of Distributed Communications and Monitoring

27 05 00 Common Work Results for Communications

27 05 05 Selective Demolition for Communications
27 05 13 Communications Services
27 05 13.13 Dialtone Services
27 05 13.23 T1 Services
27 05 13.33 DSL Services
27 05 13.43 Cable Services
27 05 13.53 Satellite Services
27 05 26 Grounding and Bonding for Communications Systems
27 05 28 Pathways for Communications Systems
27 05 29 Hangers and Supports for Communications Systems
27 05 33 Conduits and Backboxes for Communications Systems
27 05 36 Cable Trays for Communications Systems
27 05 39 Surface Raceways for Communications Systems
27 05 43 Underground Ducts and Raceways for Communications Systems
27 05 46 Utility Poles for Communications Systems
27 05 48 Vibration and Seismic Controls for Communications Systems
27 05 53 Identification for Communications Systems

27 06 00 Schedules for Communications

27 06 10 Schedules for Structured Cabling and Enclosures
27 06 20 Schedules for Data Communications
27 06 30 Schedules for Voice Communications
27 06 40 Schedules for Audio-Video Communications
27 06 50 Schedules for Distributed Communications and Monitoring

27 08 00 Commissioning of Communications

27 10 00 Structured Cabling

27 11 00 Communications Equipment Room Fittings

27 11 13 Communications Entrance Protection
27 11 16 Communications Cabinets, Racks, Frames, and Enclosures
27 11 19 Communications Termination Blocks and Patch Panels
27 11 23 Communications Cable Management and Ladder Rack
27 11 26 Communications Rack Mounted Power Protection and Power Strips

27 13 00 Communications Backbone Cabling

27 13 13 Communications Copper Backbone Cabling
27 13 13.13 Communications Copper Cable Splicing and Terminations

27 13 23 Communications Optical Fiber Backbone Cabling
27 13 23.13 Communications Optical Fiber Splicing and Terminations
27 13 33 Communications Coaxial Backbone Cabling
27 13 33.13 Communications Coaxial Splicing and Terminations
27 13 43 Communications Services Cabling
27 13 43.13 Dialtone Services Cabling
27 13 43.23 T1 Services Cabling
27 13 43.33 DSL Services Cabling
27 13 43.43 Cable Services Cabling
27 13 43.53 Satellite Services Cabling

27 15 00 Communications Horizontal Cabling

27 15 01 Communications Horizontal Cabling Applications
27 15 01.16 Voice Communications Horizontal Cabling
27 15 01.19 Data Communications Horizontal Cabling
27 15 01.23 Audio-Video Communications Horizontal Cabling
27 15 01.39 Patient Monitoring and Telemetry Communications Horizontal Cabling
27 15 01.43 Nurse Call and Intercom Communications Horizontal Cabling
27 15 01.46 Paging Communications Horizontal Cabling
27 15 01.49 Intermediate Frequency/Radio Frequency Communications Horizontal Cabling
27 15 01.53 Antennas Communications Horizontal Cabling
27 15 13 Communications Copper Horizontal Cabling
27 15 23 Communications Optical Fiber Horizontal Cabling
27 15 33 Communications Coaxial Horizontal Cabling
27 15 43 Communications Faceplates and Connectors

27 16 00 Communications Connecting Cords, Devices, and Adapters

27 16 13 Communications Custom Cable Assemblies
27 16 16 Communications Media Converters, Adapters, and Transceivers
27 16 19 Communications Patch Cords, Station Cords, and Cross Connect Wire

27 20 00 Data Communications

27 21 00 Data Communications Network Equipment

27 21 13 Data Communications Firewalls
27 21 16 Data Communications Routers, CSU/DSU, Multiplexers, Codecs, and Modems
27 21 26 Data Communications Network Management
27 21 29 Data Communications Switches and Hubs
27 21 33 Data Communications Wireless Access Points

27 22 00 Data Communications Hardware

27 22 13 Data Communications Mainframes
27 22 16 Data Communications Storage and Backup
27 22 19 Data Communications Servers
27 22 23 Data Communications Desktops
27 22 26 Data Communications Laptops
27 22 29 Data Communications Handhelds

27 24 00 Data Communications Peripheral Data Equipment

27 24 13 Printers
27 24 16 Scanners
27 24 19 External Drives

27 24 23 Audio-Video Devices
27 24 26 Virtual Reality Equipment
27 24 29 Disaster Recovery Equipment

27 25 00 Data Communications Software

27 25 13 Virus Protection Software
27 25 16 Application Suites
27 25 19 Email Software
27 25 23 Graphics/Multimedia Software
27 25 26 Customer Relationship Management Software
27 25 29 Operating System Software
27 25 33 Database Software
27 25 37 Virtual Private Network Software
27 25 39 Internet Conferencing Software

27 26 00 Data Communications Programming and Integration Services

27 26 13 Web Development
27 26 16 Database Development
27 26 19 Application Development
27 26 23 Network Integration Requirements
27 26 26 Data Communications Integration Requirements

27 30 00 Voice Communications

27 31 00 Voice Communications Switching and Routing Equipment

27 31 13 PBX/ Key Systems
27 31 23 Internet Protocol Voice Switches

27 32 00 Voice Communications Terminal Equipment

27 32 13 Telephone Sets
27 32 16 Wireless Transceivers
27 32 23 Elevator Telephones
27 32 26 Ring-Down Emergency Telephones
27 32 29 Facsimiles and Modems
27 32 36 TTY Equipment
27 32 43 Radio Communications Equipment

27 33 00 Voice Communications Messaging

27 33 16 Voice Mail and Auto Attendant
27 33 23 Interactive Voice Response
27 33 26 Facsimile Servers

27 34 00 Call Accounting

27 34 13 Toll Fraud Equipment and Software
27 34 16 Telemanagement Software

27 35 00 Call Management

27 35 13 Digital Voice Announcers
27 35 16 Automatic Call Distributors
27 35 19 Call Status and Management Displays
27 35 23 Dedicated 911 Systems

27 40 00 Audio-Video Communications

27 41 00 Audio-Video Systems

27 41 13 Architecturally Integrated Audio-Video Equipment
27 41 16 Integrated Audio-Video Systems and Equipment
27 41 16.25 Integrated Audio-Video Systems and Equipment for Restaurants and Bars
27 41 16.28 Integrated Audio-Video Systems and Equipment for Conference Rooms
27 41 16.29 Integrated Audio-Video Systems and Equipment for Board Rooms
27 41 16.51 Integrated Audio-Video Systems and Equipment for Classrooms
27 41 16.52 Integrated Audio-Video Systems and Equipment for Religious Facilities
27 41 16.61 Integrated Audio-Video Systems and Equipment for Theaters
27 41 16.62 Integrated Audio-Video Systems and Equipment for Auditoriums
27 41 16.63 Integrated Audio-Video Systems and Equipment for Stadiums and Arenas
27 41 19 Portable Audio-Video Equipment
27 41 23 Audio-Video Accessories
27 41 33 Master Antenna Television Systems
27 41 43 Audio-Video Conferencing

27 42 00 Electronic Digital Systems

27 42 13 Point of Sale Systems
27 42 16 Transportation Information Display Systems
27 42 19 Public Information Systems

27 50 00 Distributed Communications and Monitoring Systems

27 51 00 Distributed Audio-Video Communications Systems

27 51 13 Paging Systems
27 51 13.13 Overhead Paging Systems
27 51 16 Public Address Systems
27 51 19 Sound Masking Systems
27 51 23 Intercommunications and Program Systems
27 51 23.20 Commercial Intercommunications and Program Systems
27 51 23.30 Residential Intercommunications and Program Systems
27 51 23.50 Educational Intercommunications and Program Systems
27 51 23.63 Detention Intercommunications and Program Systems
27 51 23.70 Healthcare Intercommunications and Program Systems
27 51 26 Assistive Listening Systems

27 52 00 Healthcare Communications and Monitoring Systems

27 52 13 Patient Monitoring and Telemetry Systems
27 52 16 Telemedicine Systems
27 52 19 Healthcare Imaging Systems
27 52 23 Nurse Call/Code Blue Systems

27 53 00 Distributed Systems

27 53 13 Clock Systems
27 53 13.13 Wireless Clock Systems
27 53 16 Infrared and Radio Frequency Tracking Systems
27 53 19 Internal Cellular, Paging, and Antenna Systems

28 00 00 Electronic Safety and Security

28 01 00 Operation and Maintenance of Electronic Safety And Security

28 01 10	Operation and Maintenance of Electronic Access Control and Intrusion Detection
28 01 10.51	Maintenance and Administration of Electronic Access Control and Intrusion Detection
28 01 10.71	Revisions and Upgrades of Electronic Access Control and Intrusion Detection
28 01 20	Operation and Maintenance of Electronic Surveillance
28 01 30	Operation and Maintenance of Electronic Detection and Alarm
28 01 30.51	Maintenance and Administration of Electronic Detection and Alarm
28 01 30.71	Revisions and Upgrades of Electronic Detection and Alarm
28 01 40	Operation and Maintenance of Electronic Monitoring and Control
28 01 40.51	Maintenance and Administration of Electronic Monitoring and Control
28 01 40.71	Revisions and Upgrades of Electronic Monitoring and Control

28 05 00 Common Work Results for Electronic Safety and Security

28 05 05	Selective Demolition for Electronic Safety and Security
28 05 13	Conductors and Cables for Electronic Safety and Security
28 05 13.13	CCTV Communications Conductors and Cables
28 05 13.16	Access Control Communications Conductors and Cables
28 05 13.19	Intrusion Detection Communications Conductors and Cables
28 05 13.23	Fire Alarm Communications Conductors and Cables
28 05 26	Grounding and Bonding for Electronic Safety and Security
28 05 28	Pathways for Electronic Safety and Security
28 05 28.29	Hangers and Supports for Electronic Safety and Security
28 05 28.33	Conduits and Backboxes for Electronic Safety and Security
28 05 28.36	Cable Trays for Electronic Safety and Security
28 05 28.39	Surface Raceways for Electronic Safety and Security
28 05 48	Vibration and Seismic Controls for Electronic Safety and Security
28 05 53	Identification for Electronic Safety and Security

28 06 00 Schedules for Electronic Safety and Security

28 06 10	Schedules for Electronic Access Control and Intrusion Detection
28 06 20	Schedules for Electronic Surveillance
28 06 30	Schedules for Electronic Detection and Alarm
28 06 40	Schedules for Electronic Monitoring and Control

28 08 00 Commissioning of Electronic Safety and Security

28 10 00 Electronic Access Control and Intrusion Detection

28 13 00 Access Control

28 13 13	Access Control Global Applications
28 13 16	Access Control Systems and Database Management
28 13 19	Access Control Systems Infrastructure
28 13 26	Access Control Remote Devices
28 13 26.11	Wireless Access Control Devices
28 13 33	Access Control Interfaces

28 13 33.16 Access Control Interfaces to Access Control Hardware
28 13 33.26 Access Control Interfaces to Intrusion Detection
28 13 33.33 Access Control Interfaces to Video Surveillance
28 13 33.36 Access Control Interfaces to Fire Alarm
28 13 43 Access Control Identification Management Systems
28 13 53 Security Access Detection
28 13 53.13 Security Access Metal Detectors
28 13 53.16 Security Access X-Ray Equipment
28 13 53.23 Security Access Explosive Detection Equipment
28 13 53.29 Security Access Sniffing Equipment
28 13 63 Access Control Vehicle Identification System

28 16 00 Intrusion Detection

28 16 13 Intrusion Detection Control, GUI, and Logic Systems
28 16 16 Intrusion Detection Systems Infrastructure
28 16 19 Intrusion Detection Remote Devices and Sensors
28 16 33 Intrusion Detection Interfaces
28 16 33.13 Intrusion Detection Interfaces to Remote Monitoring
28 16 33.16 Intrusion Detection Interfaces to Access Control Hardware
28 16 33.23 Intrusion Detection Interfaces to Access Control System
28 16 33.33 Intrusion Detection Interfaces to Video Surveillance
28 16 33.36 Intrusion Detection Interfaces to Fire Alarm
28 16 43 Perimeter Security Systems

28 20 00 Electronic Surveillance

28 23 00 Video Surveillance

28 23 13 Video Surveillance Control and Management Systems
28 23 16 Video Surveillance Monitoring and Supervisory Interfaces
28 23 19 Digital Video Recorders and Analog Recording Devices
28 23 23 Video Surveillance Systems Infrastructure
28 23 26 Video Surveillance Remote Positioning Equipment
28 23 29 Video Surveillance Remote Devices and Sensors

28 26 00 Electronic Personal Protection Systems

28 26 13 Electronic Personal Safety Detection Systems
28 26 16 Electronic Personal Safety Alarm Annunciation and Control Systems
28 26 19 Electronic Personal Safety Interfaces to Remote Monitoring
28 26 23 Electronic Personal Safety Emergency Aid Devices

28 30 00 Electronic Detection and Alarm

28 31 00 Fire Detection and Alarm

28 31 11 Digital, Addressable Fire-Alarm Systems
28 31 12 Zoned (DC Loop) Fire-Alarm Systems
28 31 13 Fire Detection and Alarm Control, GUI, and Logic Systems
28 31 23 Fire Detection and Alarm Annunciation Panels and Fire Stations
28 31 33 Fire Detection and Alarm Interfaces
28 31 33.13 Fire Detection and Alarm Interfaces to Remote Monitoring
28 31 33.16 Fire Detection and Alarm Interfaces to Access Control Hardware
28 31 33.23 Fire Detection and Alarm Interfaces to Access Control System
28 31 33.26 Fire Detection and Alarm Interfaces to Intrusion Detection
28 31 33.33 Fire Detection and Alarm Interfaces to Video Surveillance

28 31 33.43	Fire Detection and Alarm Interfaces to Elevator Control
28 31 43	Fire Detection Sensors
28 31 46	Smoke Detection Sensors
28 31 49	Carbon-Monoxide Detection Sensors
28 31 53	Fire Alarm Initiating Devices
28 31 53.13	Fire Alarm Pull Stations
28 31 53.23	Fire Alarm Level Detectors Switches
28 31 53.33	Fire Alarm Flow Switches
28 31 53.43	Fire Alarm Pressure Sensors
28 31 63	Fire Alarm Integrated Audio Visual Evacuation Systems
28 31 63.13	Fire Alarm Horns and Strobes
28 32 00	**Radiation Detection and Alarm**
28 32 13	Radiation Detection and Alarm Control, GUI, and Logic Systems
28 32 23	Radiation Detection and Alarm Integrated Audio Evacuation Systems
28 32 33	Radiation Detection Sensors
28 32 43	Radiation Dosimeters
28 33 00	**Gas Detection and Alarm**
28 33 13	Gas Detection and Alarm Control, GUI, and Logic Systems
28 33 23	Gas Detection and Alarm Integrated Audio Evacuation Systems
28 33 33	Gas Detection Sensors
28 34 00	**Fuel-Oil Detection and Alarm**
28 34 13	Fuel-Oil Detection and Alarm Control, GUI, and Logic Systems
28 34 23	Fuel-Oil Detection and Alarm Integrated Audio Evacuation Systems
28 34 33	Fuel-Oil Detection Sensors
28 35 00	**Refrigerant Detection and Alarm**
28 35 13	Refrigerant Detection and Alarm Control, GUI, and Logic Systems
28 35 23	Refrigerant Detection and Alarm Integrated Audio Evacuation Systems
28 35 33	Refrigerant Detection Sensors
28 36 00	**Water Detection and Alarm**
28 36 13	Water Detection and Alarm Control, GUI, and Logic Systems
28 36 33	Water Detection Sensors
28 36 43	Building Envelope Water Detection and Alarm
28 39 00	**Mass Notification Systems**

28 40 00 Electronic Monitoring and Control

28 41 00	**Electronic Structural Monitoring Systems**
28 46 00	**Electronic Detention Monitoring and Control Systems**
28 46 13	Hard-Wired Detention Monitoring and Control Systems
28 46 16	Relay-Logic Detention Monitoring and Control Systems
28 46 19	PLC Electronic Detention Monitoring and Control Systems
28 46 23	Computer-Based Detention Monitoring and Control Systems
28 46 26	Discreet-Logic Detention Monitoring and Control Systems
28 46 29	Discreet-Distributed Intelligence Detention Monitoring and Control Systems

2.13. APPENDIX M - LOS ANGELES CITY SEISMIC PARTS REFERENCE

CITY OF LOS ANGELES
CALIFORNIA

ERIC GARCETTI
MAYOR

BOARD OF
BUILDING AND SAFETY
COMMISSIONERS

HELENA JUBANY
PRESIDENT

VAN AMBATIELOS
VICE-PRESIDENT

E. FELICIA BRANNON
VICTOR H. CUEVAS
GEORGE HOVAGUIMIAN

DEPARTMENT OF
BUILDING AND SAFETY
201 NORTH FIGUEROA STREET
LOS ANGELES, CA 90012

RAYMOND S. CHAN, C.E., S.E.
GENERAL MANAGER

Cooper B-Line I TOLCO
1375 Sampson Ave.
Corona, CA 92879

Alexander Schickling
(951) 385-9491

RESEARCH REPORT: RR 25949
(CSI # 15060)

Expires: June 1, 2015
Issued Date: June 1, 2014
Code: 2014LABC

GENERAL APPROVAL – 4", 6", and 8" Clevis Hanger Assembly and Seismic Bracing Attachment Brackets of Support on Non Structural Components and Seismic Hold- down Clamps for Cable Tray.

DETAILS

1. 4", 6", and 8" Clevis Hanger Assembly:
Each size assembly consists of the following components:
   a) Fig. 1 CBS cross bolt spacer and Fig. B3100 Standard Clevis Hanger.
   b) 5/8" threaded rod for the 4" standard clevis hanger, ¾" threaded rod for the 6" and 8" standard clevis hanger.
   c) Fig. 980 sway brace attachment

The maximum allowable transverse load applied at the center of the pipe for each assembly is shown in Table 1.

2. Fig. 985 Mechanical Fast Clamp:
The Fig. 985 mechanical fast clamp is a low carbon steel used for attachment of seismic bracing to pipe hanger or trapeze. This clamp fits a rod size of 1/2" through 5/8" in diameter.

The maximum allowable load applied to a bracing member attached to the clamp at 30 or 45 degrees from a vertical plane are shown in Table 2.

3. Fig. 986 Mechanical Fast Clamp:
The Fig. 986 mechanical fast clamp is a low carbon steel used for attachment of seismic bracing to pipe hanger or trapeze. This clamp fits a rod size of ½" in diameter, or ½" bolt to attach to the structure.

Cooper B-Line I TOLCO
RE: 4", 6", and 8" Clevis Hanger Assembly and Seismic Bracing Attachment Brackets of Support on Non Structural Components and Seismic Hold- down Clamps for Cable Tray

The maximum allowable load applied to a bracing member attached to the clamp at 30 or 45 degrees from a vertical plane are shown in Table 2.

4. Fig. 981 Sway Brace Attachment:
The Fig. 981 sway brace attachment is a low carbon steel multi-functional attachment to hanger rod, strut or structural steel in a lateral or longitudinal brace assembly. The TOLCO Fig. 981 was designed to be used with B-Line B22 solid channel or steel pipe.

The maximum allowable load applied to a bracing member attached to the Fig. 981 sway brace at 30 or 45 degrees from a vertical plane are shown in Table 2.

5. Fig. 990 Cable Sway Brace Attachment:
The cable sway brace attachment is a carbon steel material with pre galvanized finish and is used to attach min 3/16" diameter pre-stretched galvanized aircraft cable to structure or hanger with a rod size of 1/2" in diameter, or ½" bolt to attach to the structure.

The maximum allowable load applied to the aircraft cable attached to the clamp at 30 or 45 degrees from a vertical plane are shown in Table 2.

6. Fig. 991 Cable Sway Brace Attachment:
The cable sway brace attachment is a carbon steel material with pre galvanized finish and is used to attach min 3/16" diameter pre-stretched galvanized aircraft cable to structure or hanger with a rod size of 3/8" through 5/8" in diameter.

The maximum allowable load applied to the aircraft cable attached to the clamp at 30 or 45 degrees from a vertical plane are shown in Table 2.

7. Fig. 9ZN-1205, 9ZN-1208, 9ZN-1241 & B335 Hold Down Clamps:
The hold down clamps hold B-Line branded cable tray to trapezes' utilizing B-Line branded strut.

The Maximum allowable loads applied to the hold down clamps are shown in Table 3.

Cooper B-Line I TOLCO
RE: 4", 6", and 8" Clevis Hanger Assembly and Seismic Bracing Attachment Brackets of Support on Non Structural Components and Seismic Hold- down Clamps for Cable Tray

Table 1. Allowable Values (lbf) for Pipe Hangers with Clevis Assembly.

No.	Configuration	Brace Orientation from Vertical Plane 45 degree	30 degree
1	4" Clevis Hanger/Fig. 980	303	310
2	6" Clevis Hanger/Fig. 980	665	503
3	8" Clevis Hanger/Fig. 980	450	390

Note

1. The allowable loads are for design loads applied in the transverse direction at the center of the pipes.
2. Braces in the assembly and threaded rods & their connection to structure above must be designed per 2014LABC.
3. A factor of safety of 3.0 was applied to the lowest of three ultimate loades.

Table 2. Allowable Values (lbf) for Brace Attachments.

No.	Configuration	Brace Orientation from Vertical Plane 45 degree	30 degree
1	Fig. 981 with B-Line B22 Brace and 1/2" diameter rod.	N/A	1225
2	Fig. 981 with B-Line B22 Brace and 3/4" diameter rod.	1263	1225
3	Fig. 985 with B-Line B22 Brace and 5/8" diameter rod.	813	693
4	Fig. 986 with B-Line B22 Brace and 1/2" diameter rod.	786	796
5	Fig. 990 with 3/16" diameter cable and 1/2" diameter rod.	1386	1506
6	Fig. 991 with 3/16" diameter cable and 1/2" diameter rod.	1023	1073

Note

1. The allowable values are for the brace attachments only. Braces and other components must be designed per 2014 LABC
2. A factor of safety of 3.0 was applied to the lowest of three ultimate loades.

Cooper B-Line I TOLCO
RE: 4", 6", and 8" Clevis Hanger Assembly and Seismic Bracing Attachment Brackets of Support on Non Structural Components and Seismic Hold- down Clamps for Cable Tray

Table 3. Allowable Values (lbf) for Hold Down Clamps

		Clamp			Guide		
No.	Part Number	Design Load	Pt	Pl	Design Load	Pt	Pl
1	9ZN- 1205	570	482	154	570	482	-
2	9ZN-1208	570	482	154	570	482	-
3	9G-1241	1031	1239	702	-	-	-
4	B355	1195	502	168	-	-	-

Note

1. The allowable values are based on clamps being used in pairs.
2. The allowable values are applicable only with B-Line Strut
3. A factor of safety of 3.0 was applied to the average of three ultimate loads.
4. Load directions for design load, Pt and Pl are shown in detail HC01

The approval is subject to the following conditions:

1. Allowable capacities of brace attachments and clevis hanger assemblies are listed in Tables 1 and 2.

2. Existing ceiling, walls, or other structures that support hanger rods and brace attachments shall be evaluated by an architect, civil or structural engineer licensed in the State of California. The plans and calculations shall be submitted to structural plan check for review and approval.

3. Approval of the supported systems is outside the scope of the research report.

4. Calculations for the Design of hanger rods and brace elements in accordance with the 2014 Los Angeles City Building Code shall be submitted to structural plan check for review and approval.

5. Installation of the brace system shall be in accordance with the manufacturer's instructions.

6. The design of the connection used to attach the clamps and sway braces to the supporting structure shall be evaluated by an architect, civil or structural engineer licensed in the State of California. The plans and calculations shall be submitted to structural plan check for review and approval.

7. The mechanical fast clamps, hold down clamps, and the sway braces shall not be used to resist forces produced by the effects of gravity.

8. The use of the clamps and sway braces is limited to the support of Non Structural components.

9. The design of the clamps and sway braces shall be in accordance with Chapter 13 of ASCE 7-10.

Cooper B-Line I TOLCO
RE: 4", 6", and 8" Clevis Hanger Assembly and Seismic Bracing Attachment Brackets of Support on Non Structural Components and Seismic Hold- down Clamps for Cable Tray

10. Cable Sway braces must be used in opposing pairs.

11. The brace attachments listed in Table 2 are only approved as specified under the Details section of this Research Report.

12. The allowable loads shall not be increased for duration of load.

DISCUSSION

The report is in compliance with the 2014 Los Angeles City Building Code.

The approval is based on load tests.

For this General Approval to be valid on any individual construction project in the City of Los Angeles, an engineer or inspector of the Department of Building and Safety must make a determination that all conditions of the General Approval required to provide equivalency have been met in the case of each construction project under consideration.

Addressee to whom this Research Report is issued is responsible for providing copies of it, complete with any attachments indicated, to architects, engineers and builders using items approved herein in design or construction which must be approved by Department of Building and Safety Engineers and Inspectors.

ALLEN PEERY, Chief
Engineering Research Section
201 N. Figueroa St., Room 880
Los Angeles, CA 90012
Phone- 213-202-9812
Fax- 213-202-9943

KH
RR25949/MSWord2010
R05/13/14
5C3/104.2.6

Attachments: detail drawings (15 Pages)

TRANSVERSE RIGID BRACING FOR SINGLE HUNG PIPE OR CONDUIT WITH CLEVIS HANGER	DETAIL 1LAT 45

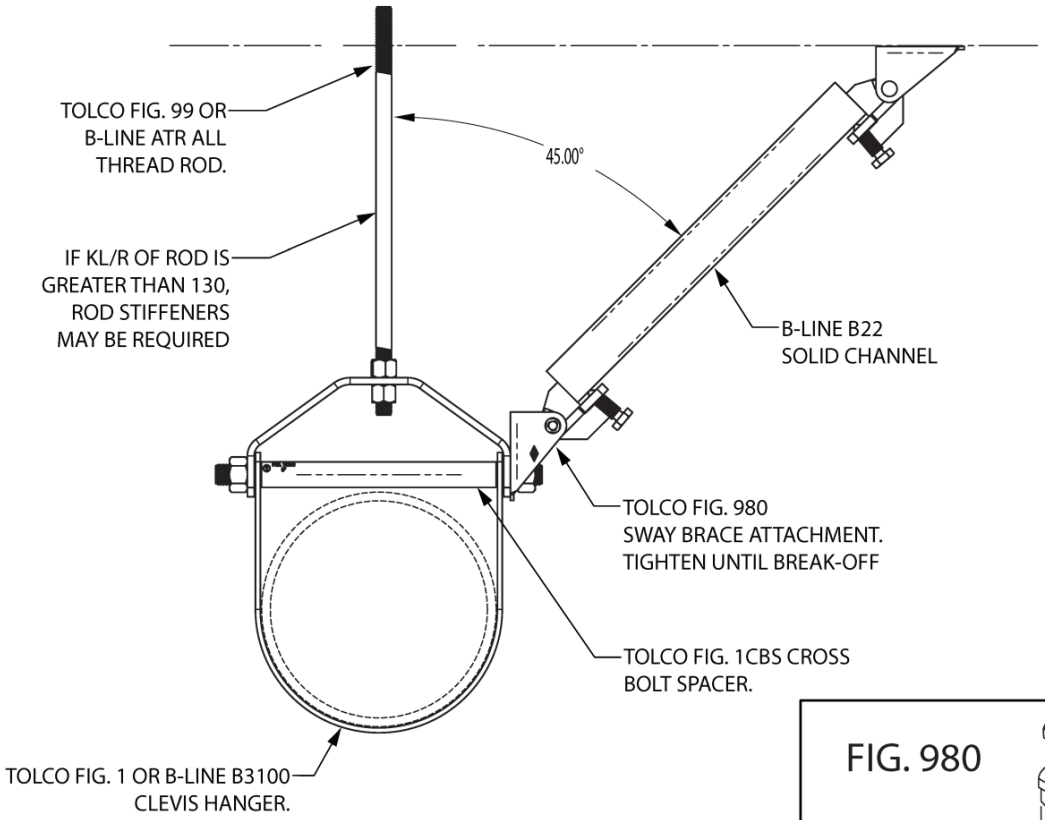

FIG. 980

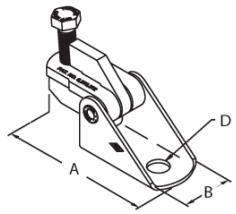

Part Number	A		B		D	
	in.	(mm)	in.	(mm)	in.	(mm)
980-1/2	4 1/2"	(114.3)	1 7/8"	(47.6)	17/32"	(13.5)
980-1/2	5 1/4"	(133.3)	1 7/8"	(47.6)	17/32"	(13.5)
980-5/8	5 1/4"	(133.3)	1 7/8"	(47.6)	11/16"	(17.5)
980-3/4	5 1/4"	(133.3)	1 7/8"	(47.6)	13/16"	(20.5)

To Install: Place the Fig. 980 onto the "bracing member". Tighten the set screw until the head breaks off. Attachment can pivot for adjustment to proper brace angle.

PIPE SIZE	4"	6"	8"
MAX TRANSVERSE LOAD (lbs) SAFETY FACTOR: 3	303	665	450

LARR APPROVAL

LARR# 25949
Page 1 of 15

REGISTERED PROFESSIONAL ENGINEER BRIAN J. UNSDERFER 5099 STRUCTURAL STATE OF CALIFORNIA
4/25/14

COOPER B-Line | TOLCO
1375 SAMPSON AVENUE | CORONA, CA. 92879
P: (951) 737-5599 | F: (951) 737-0330

DATE: September 24, 2012

TRANSVERSE RIGID BRACING FOR SINGLE HUNG PIPE OR CONDUIT WITH CLEVIS HANGER	DETAIL 1LAT 30

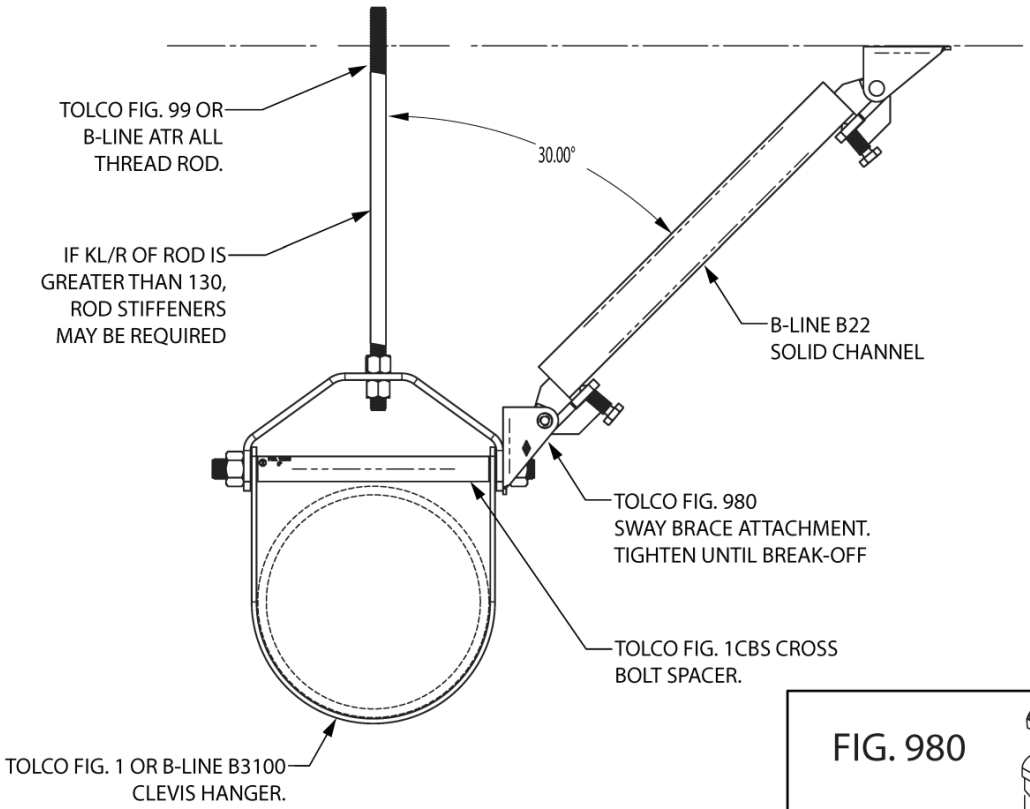

FIG. 980

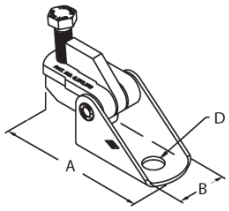

Part Number	A		B		D	
	in.	(mm)	in.	(mm)	in.	(mm)
980-1/2	4 1/2"	(114.3)	1 7/8"	(47.6)	17/32"	(13.5)
980-1/2	5 1/4"	(133.3)	1 7/8"	(47.6)	17/32"	(13.5)
980-5/8	5 1/4"	(133.3)	1 7/8"	(47.6)	11/16"	(17.5)
980-3/4	5 1/4"	(133.3)	1 7/8"	(47.6)	13/16"	(20.5)

To Install: Place the Fig. 980 onto the "bracing member". Tighten the set screw until the head breaks off. Attachment can pivot for adjustment to proper brace angle.

PIPE SIZE	4"	6"	8"
MAX TRANSVERSE LOAD (lbs) SAFETY FACTOR: 3	310	503	390

LARR APPROVAL

LARR# 25949
Page 2 of 15

REGISTERED PROFESSIONAL ENGINEER BRIAN J. UNSDERFER 5099 STRUCTURAL STATE OF CALIFORNIA
4/25/14

COOPER B-Line | TOLCO
1375 SAMPSON AVENUE | CORONA, CA. 92879
P: (951) 737-5599 | F: (951) 737-0330

DATE: September 24, 2012

TRANSVERSE RIGID BRACING FOR TRAPEZE SUPPORTED PIPE OR CONDUIT	DETAIL 2 LAT 45

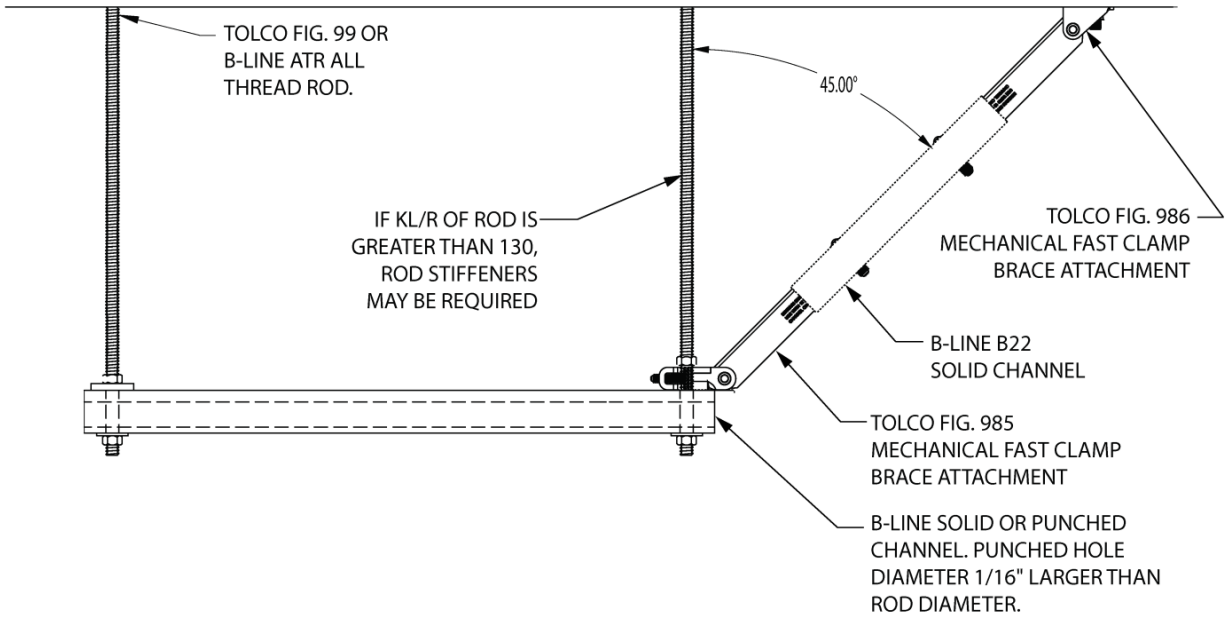

FIG. 985

LOAD PER BRACE (lbs) SAFETY FACTOR: 3
813

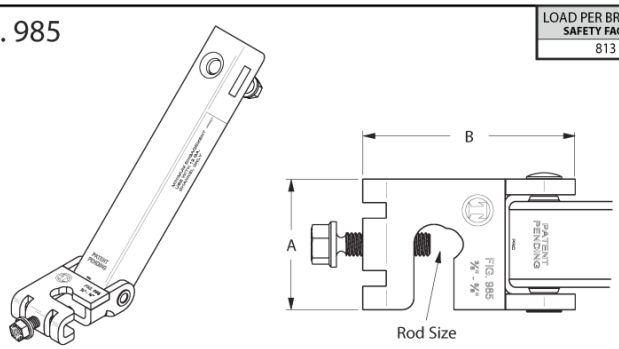

**

Part Number	Rod Size	A in.	A (mm)	B in.	B (mm)
985-S	1/2" thru 5/8"	2"	(50.8)	1 1/2"	(38.1)

To Install: Slip the open side of the 985 yoke onto the all thread rod above the top of the trapeze. Tighten set screw until head breaks off. Secure with hex nut. Insert channel brace into the 981 arm and adjust to desired length ensuring the channel passes minimum engagement indicator. Tighten set screw until head breaks off.

FIG. 986

LOAD PER BRACE (lbs) SAFETY FACTOR: 3
786

*

Part Number	Rod Size	Hole Dia. D in.	Hole Dia. D (mm)
986-1/2	1/2"	9/16"	(14.3)
~~986-5/8~~	~~5/8"~~	~~11/16"~~	~~(17.5)~~
~~986-3/4~~	~~3/4"~~	~~13/16"~~	~~(20.6)~~

Insert channel brace into the 981 arm and adjust to desired length ensuring the channel passes minimum engagement indicator. Tighten set screw until head breaks off.

LARR APPROVAL

LARR# 25949

Page 3 of 15

REGISTERED PROFESSIONAL ENGINEER BRIAN J. UNSDERFER 5099 STRUCTURAL STATE OF CALIFORNIA

4/25/14

COOPER B-Line | TOLCO

1375 SAMPSON AVENUE | CORONA, CA. 92879
P: (951) 737-5599 | F: (951) 737-0330

DATE: September 24, 2012

** Revised/*Deleted by the City of Los Angeles

TRANSVERSE RIGID BRACING FOR TRAPEZE SUPPORTED PIPE OR CONDUIT	DETAIL 2 LAT 30

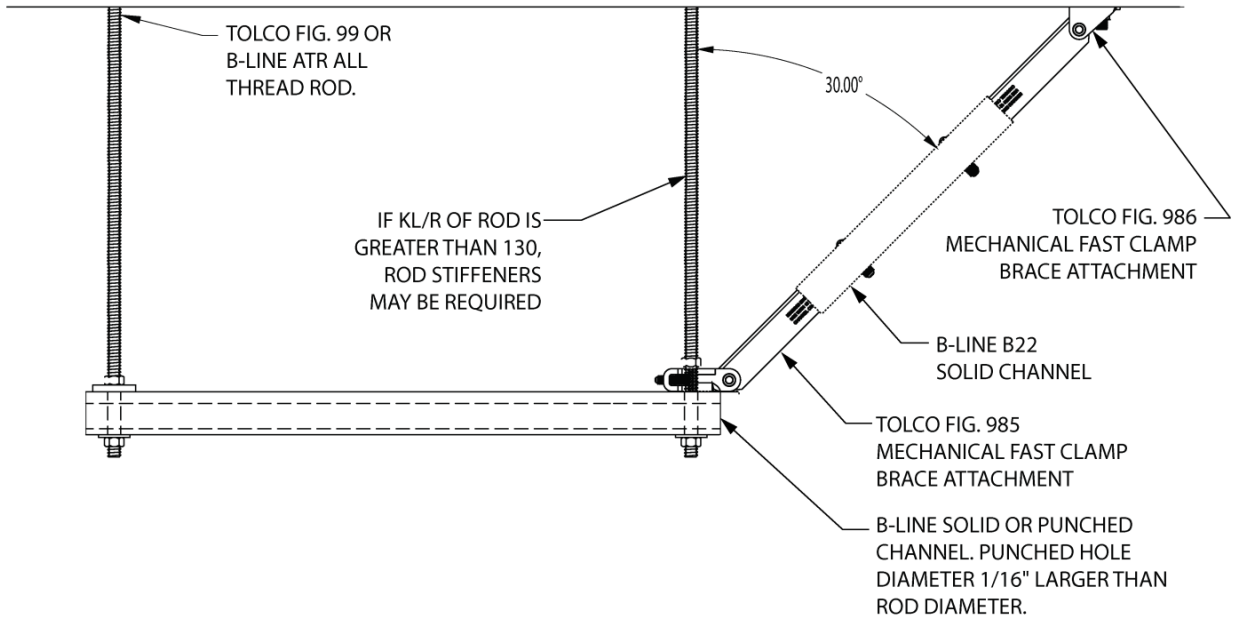

FIG. 985

LOAD PER BRACE (lbs) SAFETY FACTOR: 3
693

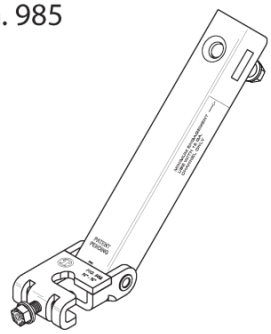

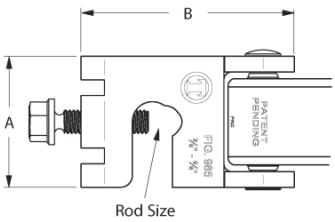

**

Part Number	Rod Size	A in.	A (mm)	B in.	B (mm)
985-S	1/2" ~~3/8"~~ thru 5/8"	2"	(50.8)	1 1/2"	(38.1)

To Install: Slip the open side of the 985 yoke onto the all thread rod above the top of the trapeze. Tighten set screw until head breaks off. Secure with hex nut. Insert channel brace into the 981 arm and adjust to desired length ensuring the channel passes minimum engagement indicator. Tighten set screw until head breaks off.

*

FIG. 986

LOAD PER BRACE (lbs) SAFETY FACTOR: 3
796

Part Number	Rod Size	Hole Dia. D in.	(mm)
986-1/2	1/2"	9/16"	(14.3)
~~986-5/8~~	~~5/8"~~	~~11/16"~~	~~(17.5)~~
~~986-3/4~~	~~3/4"~~	~~13/16"~~	~~(20.6)~~

Insert channel brace into the 981 arm and adjust to desired length ensuring the channel passes minimum engagement indicator. Tighten set screw until head breaks off.

LARR APPROVAL

REGISTERED PROFESSIONAL ENGINEER
BRIAN J. UNSDERFER
S 5099
STRUCTURAL
STATE OF CALIFORNIA
4/25/14

COOPER B-Line | TOLCO
1375 SAMPSON AVENUE | CORONA, CA. 92879
P: (951) 737-5599 | F: (951) 737-0330

DATE: September 24, 2012

LARR# 25949
Page 4 of 15

** Revised/*Deleted by the City of Los Angeles

LONGITUDINAL RIGID BRACING FOR TRAPEZE SUPPORTED PIPE OR CONDUIT

DETAIL
2 LONG 45

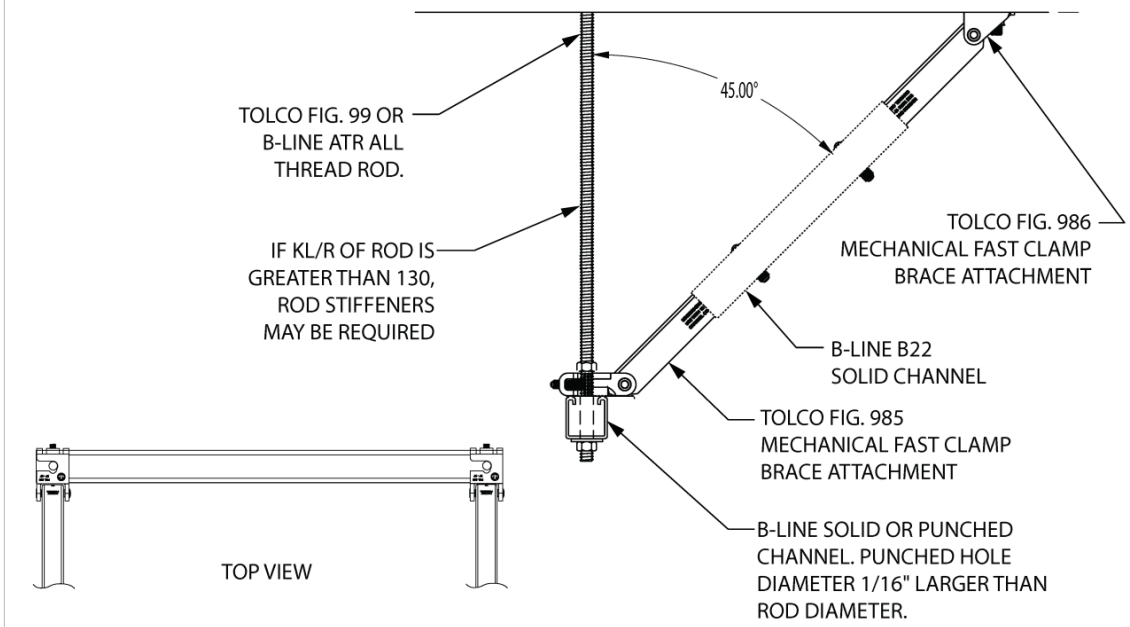

FIG. 985

LOAD PER BRACE (lbs) SAFETY FACTOR: 3
813

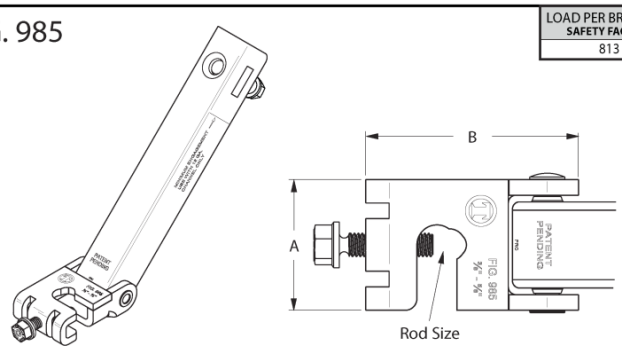

**

Part Number	Rod Size	A in.	A (mm)	B in.	B (mm)
985-S	~~1/2"~~ ~~3/8"~~ thru 5/8"	2"	(50.8)	1 1/2"	(38.1)

To Install: Slip the open side of the 985 yoke onto the all thread rod above the top of the trapeze. Tighten set screw until head breaks off. Secure with hex nut. Insert channel brace into the 981 arm and adjust to desired length ensuring the channel passes minimum engagement indicator. Tighten set screw until head breaks off.

FIG. 986

LOAD PER BRACE (lbs) SAFETY FACTOR: 3
786

*

Part Number	Rod Size	Hole Dia. D in.	Hole Dia. D (mm)
986-1/2	1/2"	9/16"	(14.3)
~~986-5/8~~	~~5/8"~~	~~11/16"~~	~~(17.5)~~
~~986-3/4~~	~~3/4"~~	~~13/16"~~	~~(20.6)~~

Insert channel brace into the 981 arm and adjust to desired length ensuring the channel passes minimum engagement indicator. Tighten set screw until head breaks off.

LARR APPROVAL

LARR# 25949
Page 5 of 15

REGISTERED PROFESSIONAL ENGINEER
BRIAN J. UNSDERFER
S 5099
STRUCTURAL
STATE OF CALIFORNIA
4/25/14

COOPER B-Line | TOLCO
1375 SAMPSON AVENUE | CORONA, CA. 92879
P: (951) 737-5599 | F: (951) 737-0330

DATE: September 24, 2012

** Revised/*Deleted by the City of Los Angeles

LONGITUDINAL RIGID BRACING FOR TRAPEZE SUPPORTED PIPE OR CONDUIT	DETAIL 2 LONG 30

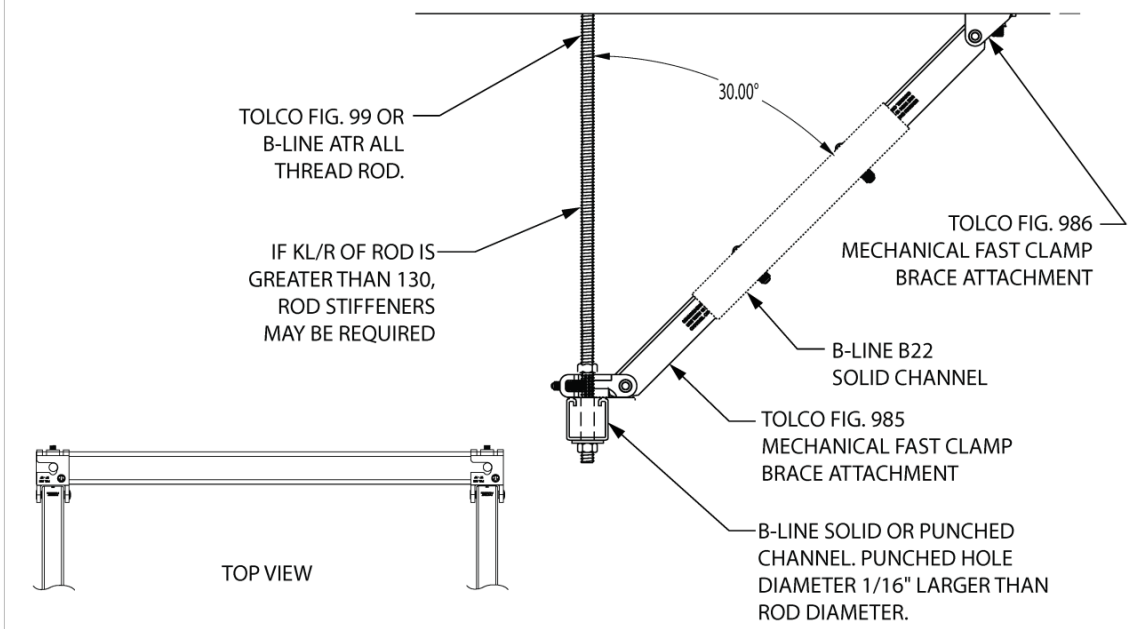

FIG. 985

LOAD PER BRACE (lbs) SAFETY FACTOR: 3
693

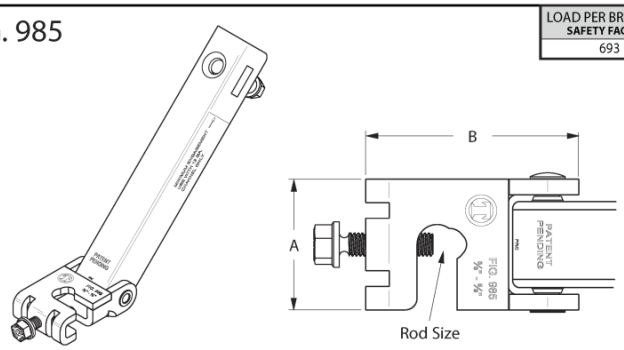

**

Part Number	Rod Size	A in.	A (mm)	B in.	B (mm)
985-S	~~1/2"~~ ~~5/8"~~ thru 5/8"	2"	(50.8)	1 1/2"	(38.1)

To Install: Slip the open side of the 985 yoke onto the all thread rod above the top of the trapeze. Tighten set screw until head breaks off. Secure with hex nut. Insert channel brace into the 981 arm and adjust to desired length ensuring the channel passes minimum engagement indicator. Tighten set screw until head breaks ~~off.~~

FIG. 986

LOAD PER BRACE (lbs) SAFETY FACTOR: 3
796

*

Part Number	Rod Size	Hole Dia. D in.	Hole Dia. D (mm)
986-1/2	1/2"	9/16"	(14.3)
~~986-5/8~~	~~5/8"~~	~~11/16"~~	~~(17.5)~~
~~986-3/4~~	~~3/4"~~	~~13/16"~~	~~(20.6)~~

Insert channel brace into the 981 arm and adjust to desired length ensuring the channel passes minimum engagement indicator. Tighten set screw until head breaks off.

LARR APPROVAL

REGISTERED PROFESSIONAL ENGINEER BRIAN J. UNSDERFER C 5099 STRUCTURAL STATE OF CALIFORNIA

4/25/14

COOPER B-Line | TOLCO
~~1375~~ SAMPSON AVENUE | CORONA, CA. 92879
P: (951) 737-5599 | F: (951) 737-0330

DATE: September 24, 2012

LARR# 25949

Page 6 of 15

** Revised/*Deleted by the City of Los Angeles

TRANSVERSE RIGID BRACING FOR TRAPEZE SUPPORTED PIPE OR CONDUIT	DETAIL 3 LAT 45

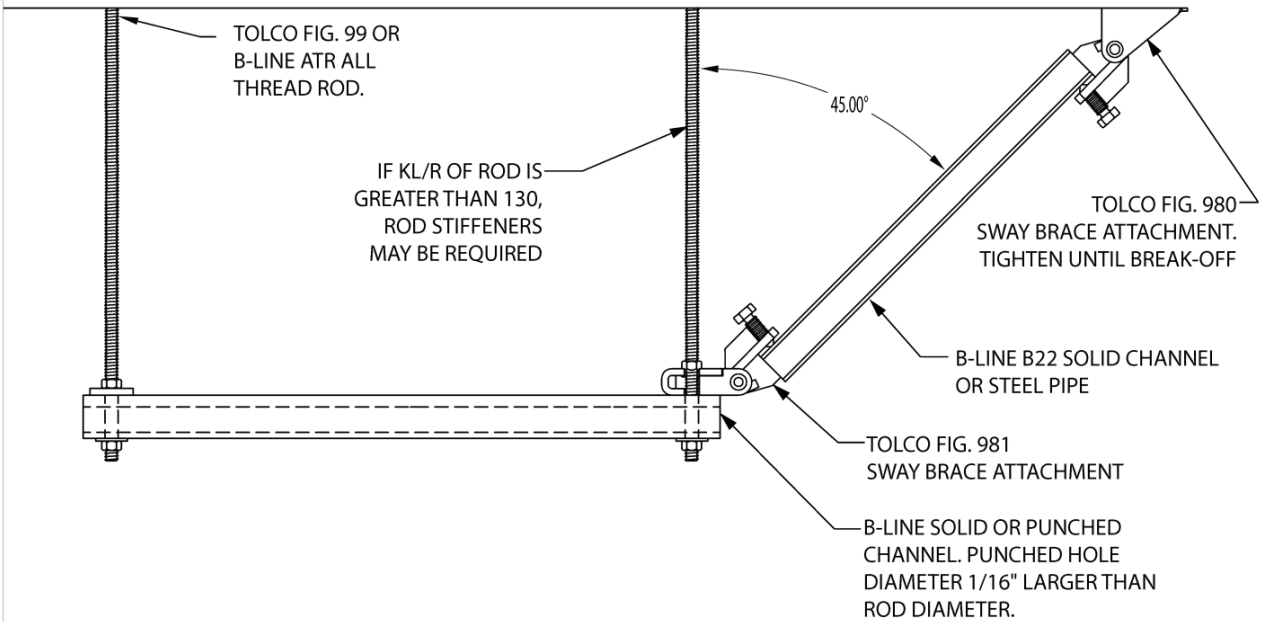

FIG. 981

LOAD PER BRACE (lbs) SAFETY FACTOR: 3
1263

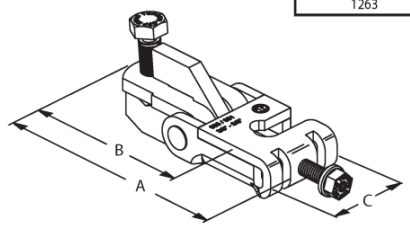

Part Number	Rod Size Range	A in.	A (mm)	B in.	B (mm)	C in.	C (mm)
981-S	3/8" thru 5/8"	5 1/8"	(130.2)	4 1/8"	(104.8)	1 1/4"	(31.7)
981-L	3/4" & 7/8"	5 1/8"	(130.2)	4 1/8"	(104.8)	1 1/4"	(31.7)

To Install: Slip the open side of the 981 yoke onto the all thread rod above the top of the trapeze. Tighten set screw until head breaks off. Secure with hex nut. Insert channel brace into the 981 jaw and tighten set screw until head breaks off.

LARR APPROVAL

REGISTERED PROFESSIONAL ENGINEER
BRIAN J. UNSDERFER
S 5099
STRUCTURAL
STATE OF CALIFORNIA
4/25/14

COOPER B-Line | TOLCO
1375 SAMPSON AVENUE | CORONA, CA. 92879
P: (951) 737-5599 | F: (951) 737-0330

DATE: September 24, 2012

LARR# 25949
Page 7 of 15

TRANSVERSE RIGID BRACING FOR TRAPEZE SUPPORTED PIPE OR CONDUIT	DETAIL 3 LAT 30

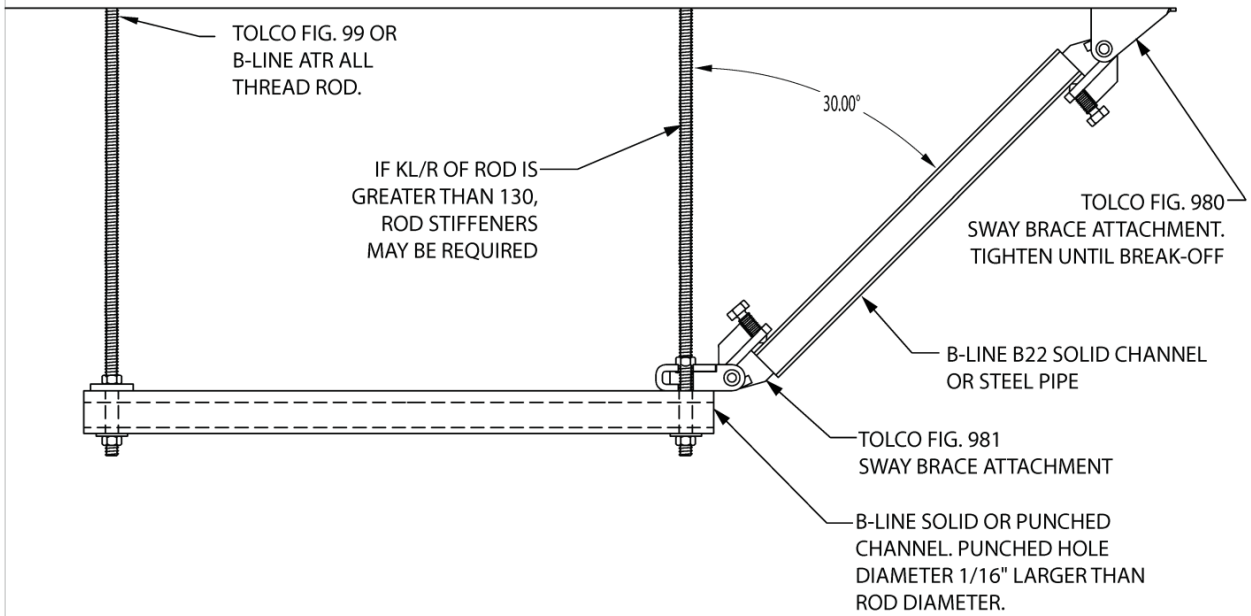

FIG. 981

LOAD PER BRACE (lbs) SAFETY FACTOR: 3
1226

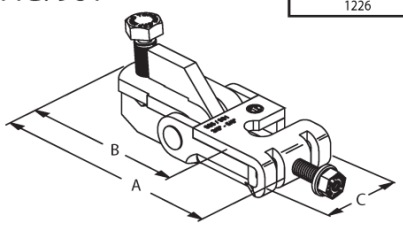

Part Number	Rod Size Range	A in.	A (mm)	B in.	B (mm)	C in.	C (mm)
981-S	3/8" thru 5/8"	5 1/8"	(130.2)	4 1/8"	(104.8)	1 1/4"	(31.7)
981-L	3/4" & 7/8"	5 1/8"	(130.2)	4 1/8"	(104.8)	1 1/4"	(31.7)

To Install: Slip the open side of the 981 yoke onto the all thread rod above the top of the trapeze. Tighten set screw until head breaks off. Secure with hex nut. Insert channel brace into the 981 jaw and tighten set screw until head breaks off.

LARR APPROVAL

LARR# 25949

Page 8 of 15

REGISTERED PROFESSIONAL ENGINEER
BRIAN J. UNSDERFER
S 5099
STRUCTURAL
STATE OF CALIFORNIA
4/25/14

COOPER B-Line | TOLCO
1375 SAMPSON AVENUE | CORONA, CA. 92879
P: (951) 737-5599 | F: (951) 737-0330

DATE: September 24, 2012

LONGITUDINAL RIGID BRACING FOR TRAPEZE SUPPORTED PIPE OR CONDUIT	DETAIL 3 LONG 45

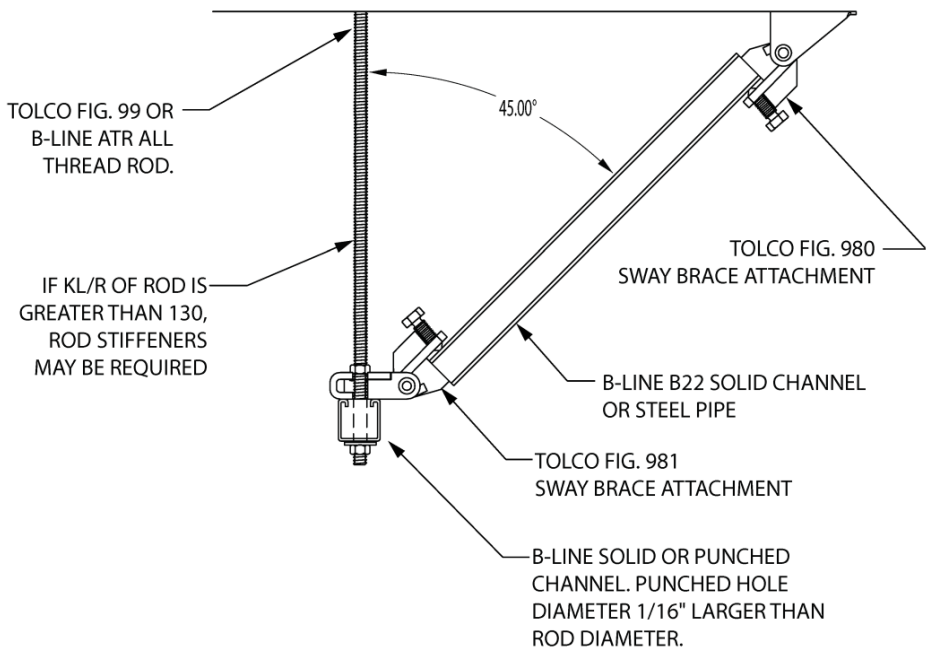

FIG. 981

LOAD PER BRACE (lbs) SAFETY FACTOR: 3
1263

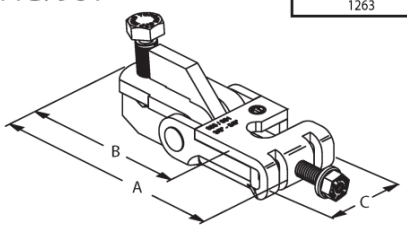

Part Number	Rod Size Range	A in.	A (mm)	B in.	B (mm)	C in.	C (mm)
981-S	3/8" thru 5/8"	5 1/8"	(130.2)	4 1/8"	(104.8)	1 1/4"	(31.7)
981-L	3/4" & 7/8"	5 1/8"	(130.2)	4 1/8"	(104.8)	1 1/4"	(31.7)

To Install: Slip the open side of the 981 yoke onto the all thread rod above the top of the trapeze. Tighten set screw until head breaks off. Secure with hex nut. Insert channel brace into the 981 jaw and tighten set screw until head breaks off.

LARR APPROVAL

LARR# 25949
Page 9 of 15

REGISTERED PROFESSIONAL ENGINEER
BRIAN J. UNSDERFER
S 5099
STRUCTURAL
STATE OF CALIFORNIA
4/25/14

COOPER B-Line | TOLCO
1375 SAMPSON AVENUE | CORONA, CA. 92879
P: (951) 737-5599 | F: (951) 737-0330

DATE: September 24, 2012

LONGITUDINAL RIGID BRACING FOR TRAPEZE SUPPORTED PIPE OR CONDUIT	DETAIL 3 LONG 30

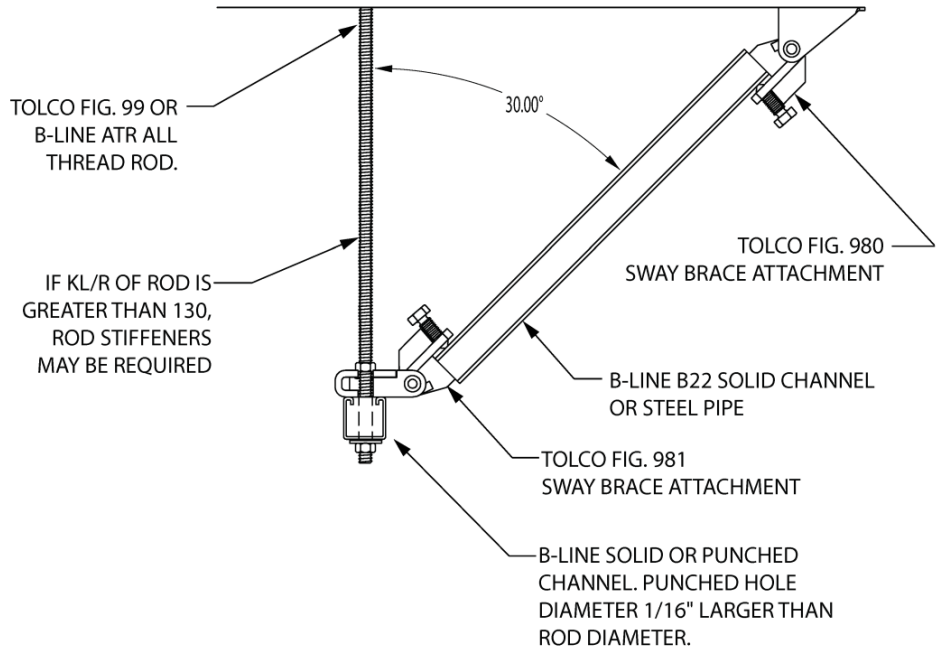

FIG. 981

LOAD PER BRACE (lbs) SAFETY FACTOR: 3
1226

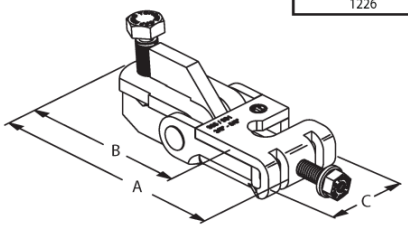

Part Number	Rod Size Range	A in.	A (mm)	B in.	B (mm)	C in.	C (mm)
981-S	3/8" thru 5/8"	5 1/8"	(130.2)	4 1/8"	(104.8)	1 1/4"	(31.7)
981-L	3/4" & 7/8"	5 1/8"	(130.2)	4 1/8"	(104.8)	1 1/4"	(31.7)

To Install: Slip the open side of the 981 yoke onto the all thread rod above the top of the trapeze. Tighten set screw until head breaks off. Secure with hex nut. Insert channel brace into the 981 jaw and tighten set screw until head breaks off.

LARR APPROVAL

LARR# 25949

Page 10 of 15

REGISTERED PROFESSIONAL ENGINEER BRIAN J. UNSDERFER C 5099 STRUCTURAL STATE OF CALIFORNIA

4/25/14

COOPER B-Line | TOLCO
1375 SAMPSON AVENUE | CORONA, CA. 92879
P: (951) 737-5599 | F: (951) 737-0330

DATE: September 24, 2012

TRANSVERSE CABLE BRACING FOR TRAPEZE SUPPORTED PIPE OR CONDUIT	DETAIL 4 LAT 45

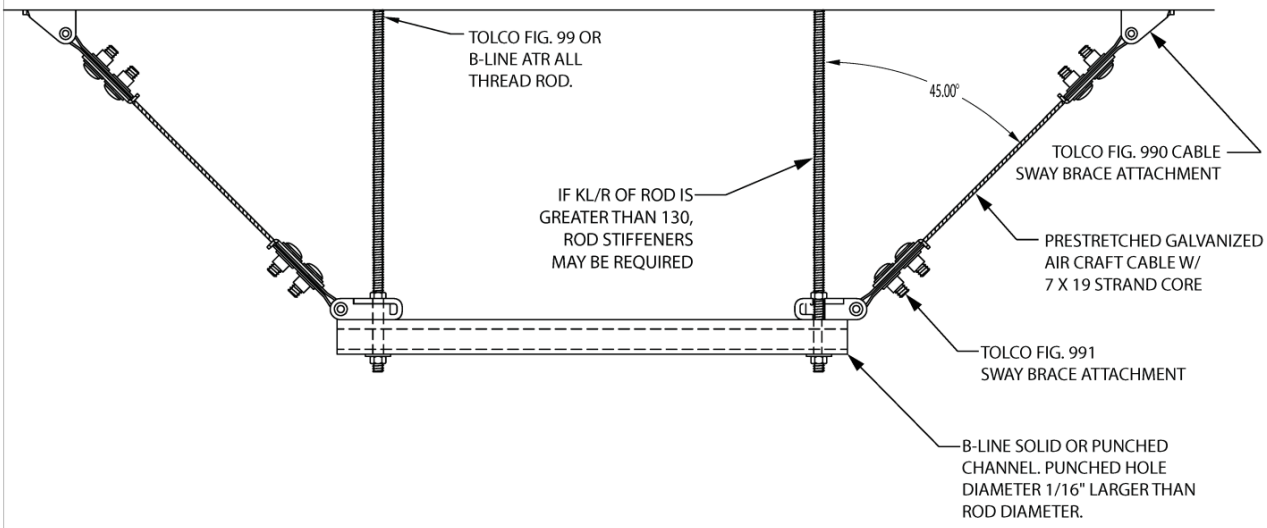

FIG. 991

MIN. 3/16" CABLE: LOAD PER BRACE (lbs) SAFETY FACTOR: 3 — 1023

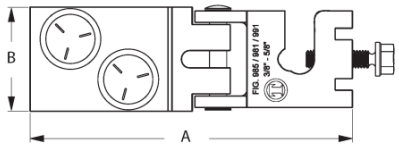

Part Number	Rod Size	Cable Diameter in.	Cable Diameter (mm)	A in.	A (mm)	B in.	B (mm)
991	3/8" thru 5/8"	3/16"	(4.8)	5"	(127)	2 1/4"	(57.1)
		1/4"	(6.3)	5"	(127)	2 5/8"	(66.7)

To Install: Slip the open side of the Fig 991 yoke onto the all thread rod above the top of the trapeze. Insert the cable through opening and out the back, pull tight. Tighten break-off nuts until nut shears. Secure in place with hex nut.

FIG. 990

MIN. 3/16" CABLE: LOAD PER BRACE (lbs) SAFETY FACTOR: 3 — 1386

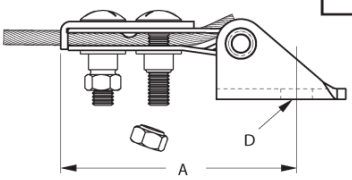

Part Number	A in.	A (mm)	D in.	D (mm)
990-1/2	5"	(127)	17/32"	(13.5)
* ~~990-5/8~~	~~5"~~	~~(127)~~	~~11/16"~~	~~(17.5)~~
~~990-3/4~~	~~5"~~	~~(127)~~	~~13/16"~~	~~(20.5)~~

To Install: Bolt Fig 990 to structural attachment. Slide cable through Fig 990 and tighten break off nuts until shearing off. Attachment can pivot for adjustment to proper brace angle.

LARR APPROVAL

LARR# 25949
Page 11 of 15

REGISTERED PROFESSIONAL ENGINEER BRIAN J. UNSDERFER S 5099 STRUCTURAL STATE OF CALIFORNIA 4/25/14

COOPER B-Line | TOLCO
1375 SAMPSON AVENUE | CORONA, CA. 92879
P: (951) 737-5599 | F: (951) 737-0330

DATE: September 24, 2012

* Deleted by the City of Los Angeles

TRANSVERSE CABLE BRACING FOR TRAPEZE SUPPORTED PIPE OR CONDUIT	DETAIL 4 LAT 30

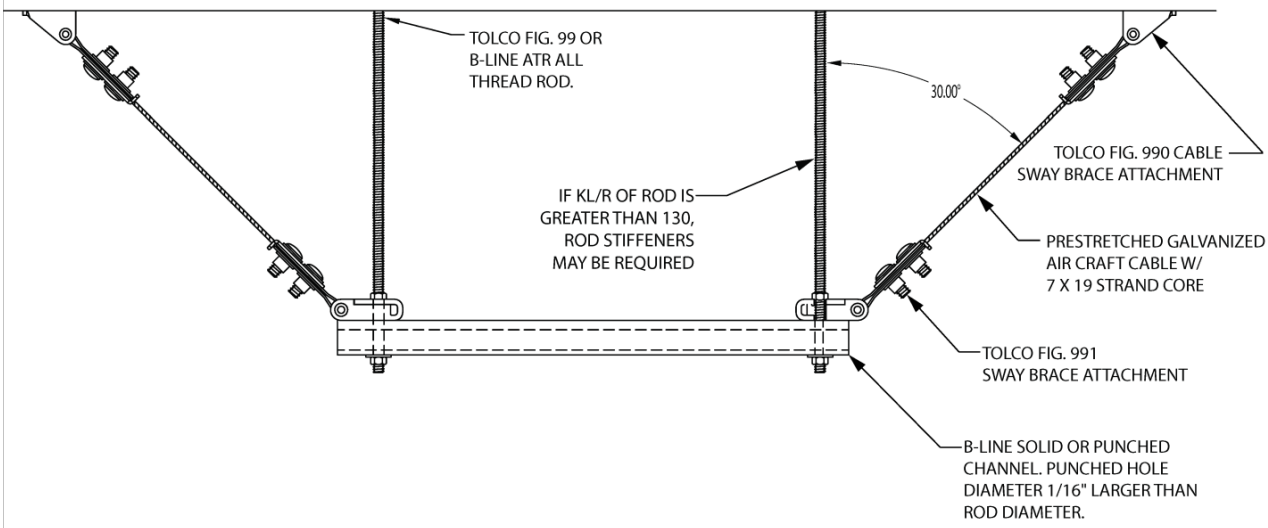

FIG. 991

MIN. 3/16" CABLE: LOAD PER BRACE (lbs) SAFETY FACTOR: 3 — 1073

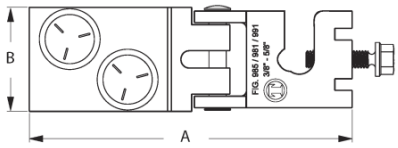

Part Number	Rod Size	Cable Diameter in.	Cable Diameter (mm)	A in.	A (mm)	B in.	B (mm)
991	3/8" thru 5/8"	3/16"	(4.8)	5"	(127)	2 1/4"	(57.1)
		1/4"	(6.3)	5"	(127)	2 5/8"	(66.7)

To Install: Slip the open side of the Fig 991 yoke onto the all thread rod above the top of the trapeze. Insert the cable through opening and out the back, pull tight. Tighten break-off nuts until nut shears. Secure in place with hex nut.

FIG. 990

MIN. 3/16" CABLE: LOAD PER BRACE (lbs) SAFETY FACTOR: 3 — 1506

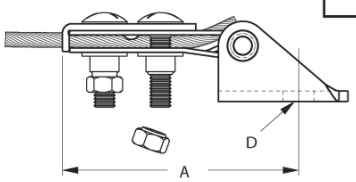

Part Number	A in.	A (mm)	D in.	D (mm)
990-1/2	5"	(127)	17/32"	(13.5)
* ~~990-5/8~~	~~5"~~	~~(127)~~	~~11/16"~~	~~(17.5)~~
~~990-3/4~~	~~5"~~	~~(127)~~	~~13/16"~~	~~(20.5)~~

To Install: Bolt Fig 990 to structural attachment. Slide cable through Fig 990 and tighten break off nuts until shearing off. Attachment can pivot for adjustment to proper brace angle.

LARR APPROVAL

REGISTERED PROFESSIONAL ENGINEER
BRIAN J. UNSDERFER
C 5099
STRUCTURAL
STATE OF CALIFORNIA
4/25/19

COOPER B-Line | TOLCO
1375 SAMPSON AVENUE | CORONA, CA. 92879
P: (951) 737-5599 | F: (951) 737-0330

DATE: September 24, 2012

LARR# 25949
Page 12 of 15

*Deleted by the City of Los Angeles

LONGITUDINAL CABLE BRACING FOR TRAPEZE SUPPORTED PIPE OR CONDUIT

DETAIL
4 LONG 45

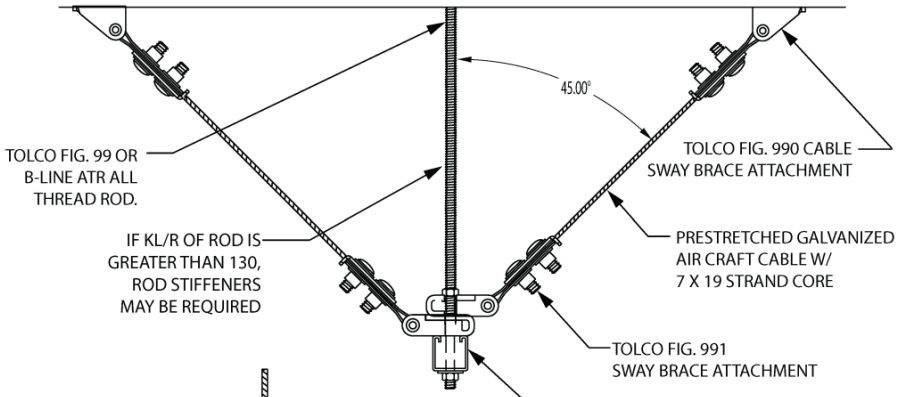

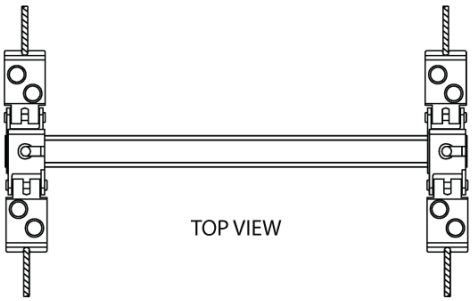

FIG. 991

MIN. 3/16" CABLE: LOAD PER BRACE (lbs) SAFETY FACTOR: 3 — 1023

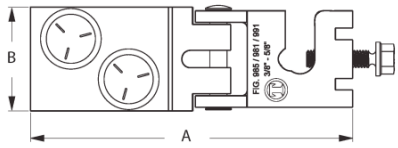

Part Number	Rod Size	Cable Diameter in.	Cable Diameter (mm)	A in.	A (mm)	B in.	B (mm)
991	3/8" thru 5/8"	3/16"	(4.8)	5"	(127)	2 1/4"	(57.1)
		1/4"	(6.3)	5"	(127)	2 5/8"	(66.7)

To Install: Slip the open side of the Fig 991 yoke onto the all thread rod above the top of the trapeze. Insert the cable through opening and out the back, pull tight. Tighten break-off nuts until nut shears. Secure in place with hex nut.

FIG. 990

MIN. 3/16" CABLE: LOAD PER BRACE (lbs) SAFETY FACTOR: 3 — 1386

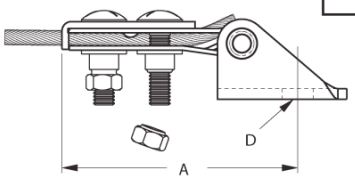

Part Number	A in.	A (mm)	D in.	D (mm)
990-1/2	5"	(127)	17/32"	(13.5)
* ~~990-5/8~~	~~5"~~	~~(127)~~	~~11/16"~~	~~(17.5)~~
~~990-3/4~~	~~5"~~	~~(127)~~	~~13/16"~~	~~(20.5)~~

To Install: Bolt Fig 990 to structural attachment. Slide cable through Fig 990 and tighten break off nuts until shearing off. Attachment can pivot for adjustment to proper brace angle.

LARR APPROVAL

REGISTERED PROFESSIONAL ENGINEER
BRIAN J. UNSDERFER
S 5099
STRUCTURAL
STATE OF CALIFORNIA
4/25/14

COOPER B-Line | TOLCO
1375 SAMPSON AVENUE | CORONA, CA. 92879
P: (951) 737-5599 | F: (951) 737-0330

DATE: September 24, 2012

LARR# 25949
Page 13 of 15

*Deleted by the City of Los Angeles

LONGITUDINAL CABLE BRACING FOR TRAPEZE SUPPORTED PIPE OR CONDUIT

DETAIL
4 LONG 30

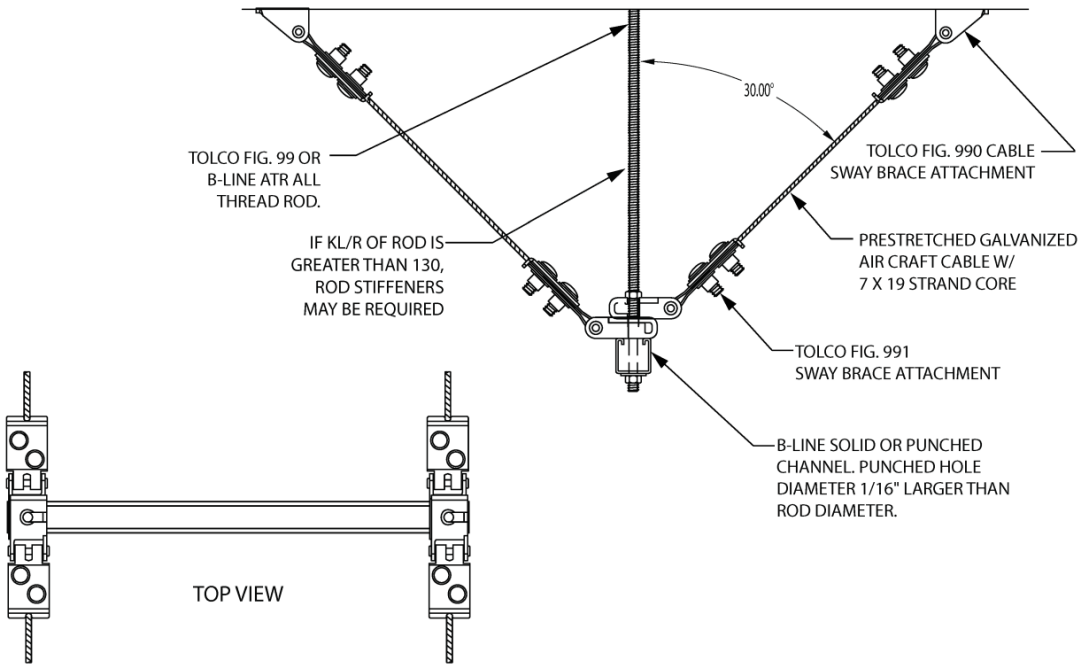

FIG. 991

MIN. 3/16" CABLE: LOAD PER BRACE (lbs) SAFETY FACTOR: 3 — 1073

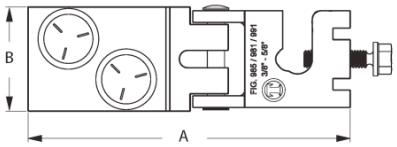

Part Number	Rod Size	Cable Diameter in.	Cable Diameter (mm)	A in.	A (mm)	B in.	B (mm)
991	3/8" thru 5/8"	3/16"	(4.8)	5"	(127)	2 1/4"	(57.1)
		1/4"	(6.3)	5"	(127)	2 5/8"	(66.7)

To Install: Slip the open side of the Fig 991 yoke onto the all thread rod above the top of the trapeze. Insert the cable through opening and out the back, pull tight. Tighten break-off nuts until nut shears. Secure in place with hex nut.

FIG. 990

MIN. 3/16" CABLE: LOAD PER BRACE (lbs) SAFETY FACTOR: 3 — 1506

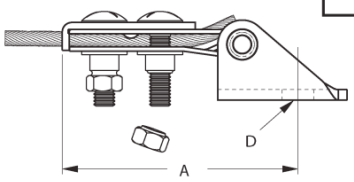

Part Number	A in.	A (mm)	D in.	D (mm)
990-1/2	5"	(127)	17/32"	(13.5)
* ~~990-5/8~~	~~5"~~	~~(127)~~	~~11/16"~~	~~(17.5)~~
~~990-3/4~~	~~5"~~	~~(127)~~	~~13/16"~~	~~(20.5)~~

To Install: Bolt Fig 990 to structural attachment. Slide cable through Fig 990 and tighten break off nuts until shearing off. Attachment can pivot for adjustment to proper brace angle.

LARR APPROVAL

REGISTERED PROFESSIONAL ENGINEER BRIAN J. UNSDERFER S 5099 STRUCTURAL STATE OF CALIFORNIA 4/25/14

COOPER B-Line | TOLCO
1375 SAMPSON AVENUE | CORONA, CA. 92879
P: (951) 737-5599 | F: (951) 737-0330

DATE: September 24, 2012

LARR# 25949
Page 14 of 15

*Deleted by the City of Los Angeles

B-LINE 9ZN-1205, 9ZN-1208, 9ZN-1241 & B355 HOLD DOWN CLAMP

DETAIL
HC01

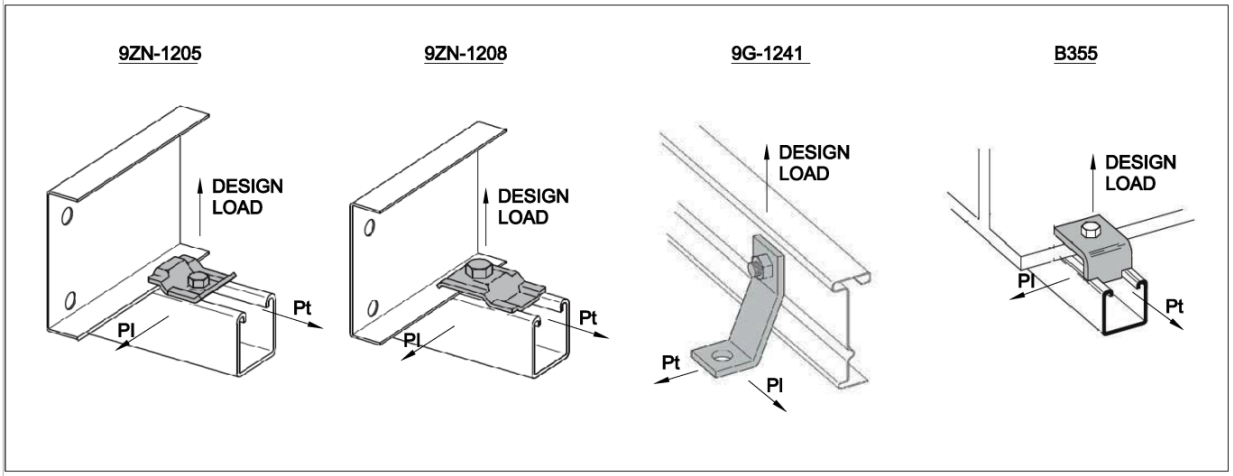

PART NUMBER	CLAMP			GUIDE		
	DESIGN LOAD	Pt	Pl	DESIGN LOAD	Pt	Pl
9ZN-1205	570	482	154	570	482	-
9ZN-1208	570	482	154	570	482	-
9G-1241	1031	1239	702	-	-	-
B355	1195	502	168	-	-	-

NOTES:

1.) DESIGN LOADS ARE IN LBS., SAFETY FACTOR: 3
2.) LOADS ARE BASED ON CLAMPS BEING USED IN PAIRS
3.) LOADS APPLICABLE ONLY WITH B-LINE STRUT
4.) FOR 9ZN-1205 AND 9ZN-1208 TORQUE HARDWARE TO 10 FT. LBS.
FOR 9ZN-1241 TORQUE HARDWARE TO 50 FT. LBS.
FOR B355 TORQUE HARDWARE TO 30 FT. LBS.

LARR APPROVAL

REGISTERED PROFESSIONAL ENGINEER
BRIAN L. UNSDERFER
5099
STRUCTURAL
STATE OF CALIFORNIA
4/25/14

COOPER B-Line | TOLCO
1375 SAMPSON AVENUE | CORONA, CA. 92879
P: (951) 737-5599 | F: (951) 737-0330

DATE: September 24, 2012

LARR# 25949
Page 15 of 15

2.14. APPENDIX N - PART NUMBERS

2.14.1. Below are two lists of part numbers pre-approved by LAWA. The first list with the parts icons, details the part numbers required for a Structured Cabling System. The second list is for everything else.

2.14.2. Wherever a specific manufacturer and model number are called out in these standards, if the model number is no longer valid, then the newest equivalent model number shall be used. LAWA IMTG shall be consulted to validate that the new model number proposed is appropriate.

Horizontal Cabling part numbers.

IT Part Numbers

NEW FACILITY CAT 6A STRUCTURED CABLING SOLUTIONS PART NUMBERS




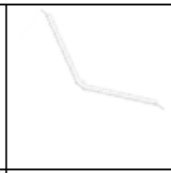


Manufacturer	Description	Faceplate	Inserts	Cable	Jack Patch Panel Angled	PP Inserts	Cable Mgmt Rear Angled	Patch Cords
Berktek Leviton Tech	BLUE	42080-4WS	6110G-RL6 (BLU)	11082057	49256-H24	6110G-RL6	49006-AMB	6210G-07L
Berktek Leviton Tech	ORANGE		6110G-RO6 (ORG)	11084255	49256-H48	6110G-RO6	49006-AMB	
Commscope Systimax	BLUE	108168543 | M14L-262	760092452	760107201	760049957	760092452	None	CPCSSX2-02F007
Commscope Systimax	ORANGE		760092379	760107227	760207308	760092379		
Belden	BLUE	AX102249	AX102288	10GXS13D15A1000	AX104599 (24port)	AX102288	None	CA21106007
Belden	ORANGE		AX102284	10GXS13003A1000	AX104601 (48port)	AX102284		

LEGACY FACILITY CAT 6 UNSTRUCTURED CABLING PART NUMBERS





Manufacturer	Description	Faceplate	Inserts	Cable	Patch Panel Flat	PP Inserts	Cable Mgmt Rear	Cable Mgmt Front	Patch Cords
Berktek Leviton Tech	BLUE	42080-4WS	61110-RL6	10032094	49255-H24	61110-RL6	49005-CMB	491RU-HFO	6D460-07L
Berktek Leviton Tech	ORANGE		61110-RO6	10033997	49255-H48	61110-RO6	49005-CMB	492RU-HFO	
Commscope Systimax	BLUE	108168543 | M14L-262	700206758	700208093	760049932	700206758	760104737 | 360-RCM-RM	760072942/HTK-19-SS-1U	CPC3312-02F007
Commscope Systimax	ORANGE		700206683	700210024	760207282	700206683		760072959/HTK-19-SS-2U	
Belden	BLUE	AX102249	AX104193	3613D15A1000	AX103114	AX104193	None	None	C601106007
Belden	ORANGE		AX104189	3613003A1000	AX103115	AX104189			

Note 1: Only the smallest diameterCables and patch cords shall be used.

Note 2: All Patch Cord Part numbers change per color and length

Infrastructure Parts List (Not for Structured Cabling Solutions)

	Manufacturer	Model/Part Number	Description
Access Floors			
	Access Floor Systems	Or Equivalent	Raised Access Floors
	COMX Products	Or Equivalent	Raised Access Floors
	Tate Airflow	Or Equivalent	Raised Access Floors
Anchors			
	Hilti	HDI+ 1/4	Carbon Steel Drop-in Anchor
	Hilti	HDI+3/8	Carbon Steel Drop-in Anchor
	Hilti	HDI+ 1/2	Carbon Steel Drop-in Anchor
	Hilti	HDI+ 5/8	Carbon Steel Drop-in Anchor
	Hilti	HDI+3/4	Carbon Steel Drop-in Anchor
	Hilti	HDI 1/4 SS303	Stainless Steel Drop-in Anchor
	Hilti	HDI 3/8 SS303	Stainless Steel Drop-in Anchor
	Hilti	HDI 1/2 SS303	Stainless Steel Drop-in Anchor
	Hilti	HDI 5/8 SS303	Stainless Steel Drop-in Anchor
	Hilti	HDI 3/4 SS303	Stainless Steel Drop-in Anchor
	Hilti	HST 1/4	Setting Tool
	Hilti	HST 3/8	Setting Tool
	Hilti	HST 1/2	Setting Tool
	Hilti	HST 5/8	Setting Tool
	Hilti	HST 3/4	Setting Tool
Anchors - Seismic			
	Roppe	Or Equivalent	Electrostatic Discharge Vinyl Floor Tiles
	B-Line	B22	Solid Channel
	B-Line	All threaded Rod	
Anti-Static Floor Tile			
	Staticworx	ESD Floor Tile	Grounded Anti-Static Floor Tile
Brush Grommets			
	Access Floor Systems	KoldLok Integral 1010	Access Floor Brush Grommet
	Access Floor Systems	KoldLok Integral 3030	Access Floor Brush Grommet
Cable Combs			
	ACOM Tools	Cable Comb	Cable Dressing
	Cablecomb	Cablecomb	Cable Dressing
Cable Tray/Ladder Rack			
	B-Line	KwickSplice Cable Tray System	Or Equivalent
	B-Line	Side Rail Drop Off	Cable Waterfall
	B-Line	SB708194418FB	19"w x 43"h x 18"d Wall Swing Rack, Black
	B-Line	SB708193018FB	19"w x 30"h x 18"d Wall Swing Rack, Black
	B-Line	SB13AL12FB	Redi-Rail Runway - 12" x 1 1/2" stringer x 10' - UL Listed

Infrastructure Parts List (Not for Structured Cabling Solutions)

	Manufacturer	Model/Part Number	Description
	B-Line	SB13AL24FB	Redi-Rail Runway - 24" x 1 1/2" stringer x 10' - UL Listed
	B-Line	SB13AL12AL	Redi-Rail Runway - 12" x 1 1/2" stringer x 10' - UL Listed
	B-Line	SB13AL24AL	Redi-Rail Runway - 24" x 1 1/2" stringer x 10' - UL Listed
	B-Line	SB213312FB	Rack to Runway Top Plate Kit - 12"
	B-Line	SB213324FB	Rack to Runway Top Plate Kit - 18"
	B-Line	SB211312FB	Wall Angle Support Kit - 12"
	B-Line	SB21312KFB	Triangular Support Bracket - 12"
	B-Line	SB2107BZN	Butt Splice Kit, UL Listed
	B-Line	SB2101ABZN	Junction Splice Kit, UL Listed
	B-Line	SB2110ABZN	Adjustable Junction Splice Kit, UL Listed
	B-Line	SB2114AFB	Vertical Wall Brackets, pair
	B-Line	SB2106AFB	Vertical Ladder Floor Bracket - Foot Kit
	B-Line	SB17VRB12FB	Ladder Rack Radius - 12"
	B-Line	SB210518FB	Runway Termination Kit
	B-Line	SB556 GUSSET KITFB	Seismic Gusset Kit
	B-Line	SB588A	Rack Anchor Kit - 3/8"-16 x 2 3/4" (70mm) wedge anchors and hardware.
	B-Line	SB13ALDO12FB	RediRail - Cable Runway Radius Drop - 12"
	B-Line	SB13ALDO24FB	RediRail - Cable Runway Radius Drop - 24"
	B-Line	SB2129U12FB	Cable Runway Radius Drop - 12"
	B-Line	ATR3/8X120	3/8" ATR Threaded Rod - 10'
	B-Line	ATR1/2X120	1/2" ATR Threaded Rod - 10'
	B-Line	B22SHGALV120	1 5/8" STRUT, Slotted Hole
	B-Line	3/8HN 3/8FW	3/8" Nut with Flat Washer
	B-Line	B444-3/8	Beam Clamps
	B-Line	RSI04A09SL-12-144	Redi-Rail Tray - 12" x 4" stringer x 12' - UL Listed (splice plates included)
	B-Line	RSI04A09SL-24-144	Redi-Rail Tray - 24" x 4" stringer x 12' - UL Listed (splice plates included)
	B-Line	R4A-UF-12	Redi-Rail Tray - Universal 12" wide x 4" rail height - Horz. Tee, 4-Way & 90 w/radius
	B-Line	R4A-UF-24	Redi-Rail Tray - Universal 24" wide x 4" rail height - Horz. Tee, 4-Way & 90 w/radius
	B-Line	RAA-OUT-12	12" Drop Out Waterfall
	B-Line	RAA-OUT-24	24" Drop Out Waterfall
	B-Line	9ZN-R238	All-Thread Hanger Rod Bracket 3/8"
	B-Line	R4A-DSL-144	Straight Section Divider Strip - 3" [used with 4" rails], 144"
	B-Line	R4A-DHB	Bend Section Divider Strip - 3" [used with 4" rails], 72"
	Chatsworth	Cable Runway System	Ladder Rack or Equivalent
Cable Tray - Wire Basket for Fiber and under Access Floor			
	B-Line Cooper	FT4X4X10	4" x 4" Flextray Wire Basket
	B-Line Cooper	Flextray Drop out Fitting	Cable Waterfall
	B-Line Cooper	Flextray FTA2DO Cable Drop out Fitting	Cable Waterfall
	Legrand	Cablofil	Wire Mesh Cable Tray with Waterfalls

Infrastructure Parts List (Not for Structured Cabling Solutions)

	Manufacturer	Model/Part Number	Description
Cabinets - All new Installations			
	Damac	CSD84Z24208-3	34" W x 36" D x 84" H
Cabinets - Legacy Pre-existing Installations Only			
	Damac	CSN1284Z23077-3	28" W x 36" D x 84" H
Cabinets - Tenant Common-Use Wiring Closets			
	Damac	WSR36AKP1VFV3	22" W x 24" D x 36" H
Cameras and Environmental Monitoring for IT Rooms			
	APC	Netbotz Rack Monitor 570 or equivalent Netbotz model	Complete with 2 Cameras, Temperature sensors, Humidity sensor, and flood alarms
Conduit			
	TBD	Blueplated EMT Conduit	For new installations
Conduit - Expansion Joints			
	Appleton	XJ	Conduit Expansion Joints
	Crouse-Hinds Platt	XJG	Conduit Expansion Joints
	Southwire	Titan Cb Blue Liquidtight	Coated Flexible Conduit
Conduit Plugs			
	Electrical Materials	Varies	Conduit Duct Plugs or Equivalent
Conduit Protectors - Driveway			
	Discount Ramps	Varies	Model varies by size
Consolidation Point			
	Chatsworth	Suspended Ceiling Enclosure	Or equivalent
	Siemon	Under-Floor Enclosure	Or equivalent
Copper - Blocks 110			
	AMP	558635-1	110 rackmount block, 100 pair
	AMP	569499-3	Doublegang surface box
	AMP	569875-7	Modular plug boots for CAT5e plugs Orange
	AMP	83936-1	6 port doublegang faceplate almond
	AMP	83936-2	6 port doublegang faceplate black
	AMP	83936-3	6 port doublegang faceplate white
	AMP	NETCONNECT	AMP labeling software
	Siemon	S110C-4	C4 blocks for 110
	Siemon	S110C-5	C5 blocks for 110
	Siemon	S20B	White spool with captive (#10) wood screw
Copper - Aerial Cable			
	Superior Essex	ALPETH	Or Equivalent - CAT 3 - Model number is determined by Pair count

Infrastructure Parts List (Not for Structured Cabling Solutions)

	Manufacturer	Model/Part Number	Description
Copper - Legacy Cables and Patch Cords			
	AMP	1116044-2	Label covers for patch panels
	AMP	1116360-3	Voice/Data empty monument
	AMP	1116412-1	Blanks SL series almond
	AMP	1116412-3	Blanks SL series white
	AMP	1116571-1	Diagonal cutters
	AMP	1116697-3	1 Port Modular box
	AMP	1116698-3	2 Port Modular box
	AMP	1339124-1	BNC coupler SL series Almond
	Belden	1189AP(White)	RG6 CATV cable plenum (1000 feet) Quad Shield
	Belden	643948	Plenum RG59 coax
	Belden	1189A(Black)	CATV RG6 cable Quad Shield
	Belden	1189A(White)	CATV RG6 cable Quad Shield
	Belden	1505A	RG59 coax cable
	Belkin	A3L980-03-BLK-S	3 foot Black CAT 6 patch cable
	Belkin	A3L980-04-BLK-S	4 foot Black CAT 6 patch cable
	Belkin	A3L980-15-BLK-S	15 foot Black CAT 6 patch cable
	Berk-Tek	10033997	CAT6 Orange plenum rated LANmark1000
	General Cable	7023708	Cross wire, 24 AWG, 1 pare, BL/W-W/BL
	General Cable	7023773	Cross wire, 24 AWG, 1 pare, O/W-W/O
	General Cable	7131688	Blue CAT6 Plenum cable
	General Cable	7131720	Black CAT6 plenum cable.
	General Cable	7131807	Black CAT6 plenum cable.
	General Cable	7131945	Orange CAT6 Plenum cable
	General Tools	582	Magnetic pick up with LED light
	Superior Essex	5E-O4P24-BK-R-ESS-NR	Unshielded outdoor CAT5E cable (1000 ft.)
	Superior Essex	PASP	CAT 3 - Model number is determined by Pair count
Copper - Legacy Horizontal Cabale Parts			
	AMP	1479443-1	1 port faceplate almond
	AMP	1479443-3	1 port faceplate white
	AMP	1479444-1	2 port faceplate almond
	AMP	1479444-3	2 port faceplate white
	AMP	1479445-1	3 port flush faceplate SL Almond
	AMP	1479445-3	3 port flush faceplate SL White
	AMP	1479446-1	4 port Face plate Almond
	AMP	1479446-3	4 port face plate white
	AMP	1479447-1	6 port faceplate almond
	AMP	1479447-2	6 port faceplate black
	AMP	1479447-3	6 port faceplate white
	AMP	1479488-3	2 Port Universal Box white
	AMP	1479489-3	4 Port Universal Box white
	AMP	1499855-1	F-Connector coupler SL series Almond
	AMP	1499855-3	F-Connector coupler SL series White
	AMP	1725150-1	SL Jack Termination Tool

Infrastructure Parts List (Not for Structured Cabling Solutions)

	Manufacturer	Model/Part Number	Description
	AMP	1933468-2	Furniture faceplate standard extender - Almond
	AMP	555650-1	ACO single gang dual port Faceplate kit, Almond
	AMP	555650-5	ACO single gang dual port Faceplate kit, white
	AMP	556222-3	Black power desk monument
	AMP	5-569278-2	CAT5 modular plugs (500 per box)
	AMP	558107-1	3 port furniture faceplate - Black
	AMP	558251-3	Single gang surface box
	AMP	558267-1	Hinged Wall bracket 2RU
	AMP	558269-1	Hinged Wall bracket 4RU
	AMP	558401-1	C4 blocks for 110
	AMP	558402-1	C5 blocks for 110
	AMP	1375288-1	Black SL series Flex-mode faceplate for Monument
	AMP	1375351-5--1	Patch Panel Card stock labels (100 pkg)
	AMP	1375352-5--1	Patch panel Self Adhesive labels (100 pkg)
	AMP	1479002-5--1	Cable self adhesive labels 4 pair (100 pkg)
	AMP	1479152-1	1 port/phone faceplate almond
	AMP	1479230-1	SL RCA almond jack Red
	AMP	1479231-1	SL RCA almond jack White
	AMP	1479232-1	SL RCA almond jack Yellow
Copper - Legacy Faceplate Extenders			
	AMP	558488-1	Furniture faceplate extender - Black
	AMP	558488-2	Furniture faceplate extender - Almond
	AMP	558493-1	Furniture faceplate adapter - Black
	AMP	558493-2	Furniture faceplate adapter - Almond
Copper - Legacy Inserts			
	AMP	1375055-1--0	CAT6 SL 110 jacks, purple
	AMP	1375055-4	CAT 6 SL 110 modular jack, gray
	AMP	1375055-5	CAT 6 SL 110 modular jack, orange
	AMP	1375055-6	CAT 6 SL 110 modular jack, blue
	AMP	1375055-8	CAT6 SL 110 jacks, yellow
	AMP	1375149-1	SL S-Video almond jack
	AMP	1375162-1	1U Horizontal Finger Duct Panel, Single sided 3" deep
	AMP	1375163-1	2U Horizontal Finger Duct Panel, Single sided 3" deep
	AMP	1375187-5	CAT 6 SL series jack Orange with dust cover
	AMP	1375187-6	CAT 6 SL series jack Blue with dust cover
Copper - Patch Panels			
	AMP	1375013-2	12 port CAT6 patch panel
	AMP	1375014-2	24 port CAT6 patch panel
	AMP	1375015-2	48 port CAT6 patch panel
	AMP	1375016-2	96 Port CAT6 Patch panel

Infrastructure Parts List (Not for Structured Cabling Solutions)

	Manufacturer	Model/Part Number	Description
Copper - Protector Blocks			
	Commscope	Carrier solutions - Building Entrance	Cable Protectors - Part number varies with size
	Emerson	Building Entrance Solutions	Cable Protectors - Part number varies with size
Copper - Test Equipment			
	Fluke Networks	Cable Iq Qualification Tester	Metallic Time Domain Reflectometer
	Fluke Networks	Dtx-Pla002 Cat6/Class-Ea Permanent Link Adaptor	Adaptor To Dtx-1800 Cable Analyzer
	Fluke Networks	Dtx-1800 Cable Analyzer	Cat 6/6a Tester
	Fluke Networks	Intellitone Pro 200 Probe	Tone Generator And Probe
	Fluke Networks	Link Runner	Copper Continuity Cable Tester
	Fluke Networks	990 Copper Pro Loop Tester	DSL Circuit Tester
	Hewlet Packard	4934a	TIMS test set
	Hewlet Packard	HP 18182A	TIMS test cables
	Hewlet Packard	Opt 001	TIMS battery pack with charger
	Tempo A Textron Company	Ts100 Telscout	T-1 Circuit Tester
	Tempo	1134-5029	Sidekick 7B field tester
	Tempo	1137-5002	Sidekick Telecom field tester
	Tempo	801K	Premium tone and probe kit
	Tempo	TS100	Telscout Metallic TDR with Option 1
	Tempo	AT8K	Tone and probe kit
Dividers			
	A-1 Steel Fence	Or Equivalent	Vinyl-coated Chain Link Room Dividers
	American Fence Compa	Or Equivalent	Vinyl-coated Chain Link Room Dividers
Dollies			
	Rubbermaid	1305	Tilt truck standard duty
	Rubbermaid	3559-00GRAY	50 Gallon square wheeled container
	Rubbermaid	RUB264000BK	Round dolly brute
Dollies and Totes			
	ULine	S-9746BL	Black Round Trip Tote
	ULine	S-9746G	Green black round trip tote
	ULine	S-9746R	Red black round trip tote
Fiber - Cable - Indoor			
	Corning	024Z88-33131-29	24-Strand MIC - SMF-28 Ultra - Tightbuffer, All-Dielectric Indoor Fiber
	Corning	048Z88-33131-29	48-Strand MIC - SMF-28 Ultra - Tightbuffer, All-Dielectric Indoor Fiber
	Corning	072Z88-33131-29	72-Strand MIC - SMF-28 Ultra - Tightbuffer, All-Dielectric Indoor Fiber
	Corning	144Z88-33131-29	144-Strand MIC - SMF-28 Ultra - Tightbuffer, All-Dielectric Indoor Fiber

Infrastructure Parts List (Not for Structured Cabling Solutions)

	Manufacturer	Model/Part Number	Description
	Corning	288Z88-33131-29	288-Strand MIC - SMF-28 Ultra - Tightbuffer, All-Dielectric Indoor Fiber
	Note: Installation of fiber other than Corning requires LAWA IMTG's pre-approval and a letter from the manufacturer certifying that Corning SMF-28 Ultra glass with Code "H" bend insensitive additive will be used.		
	Berk-Tek	PDP024AB0707-F1(COR28E+)	24f Sm Berktek W/Corning 28e+ Glass Plenum
	Berk-Tek	PDP12B048AB0707-F1(COR28E+)	48f Sm Berktek W/Corning 28e+Glass Plenum
	Berk-Tek	PDP12B072AB0707-F1(COR28E+)	72f Sm Bertek W/Corning 28e+Glass Plenum
	Berk-Tek	PDP12B144AB0707-F1(COR28E+)	144f Sm Bertek W/Corning 28e+Glass Plenum
Fiber - Cable - Indoor/Outdoor			
	Corning	024ZWP-T4101D20	24-Strand Freedm - SMF-28 Ultra - Loose Tube, Gel Free All-Dielectric Indoor/Outdoor Fiber
	Corning	048ZWP-T4101D20	48-Strand Freedm - SMF-28 Ultra - Loose Tube, Gel Free All-Dielectric Indoor/Outdoor Fiber
	Corning	072ZWP-T4101D20	72-Strand Freedm - SMF-28 Ultra - Loose Tube, Gel Free All-Dielectric Indoor/Outdoor Fiber
	Corning	144ZWP-T4101D20	144-Strand Freedm - SMF-28 Ultra - Loose Tube, Gel Free All-Dielectric Indoor/Outdoor Fiber
	Corning	288ZWP-T4101D20	288-Strand Freedm - SMF-28 Ultra - Loose Tube, Gel Free All-Dielectric Indoor/Outdoor Fiber
	Note: Installation of fiber other than Corning requires LAWA IMTG's pre-approval and a letter from the manufacturer certifying that Corning SMF-28 Ultra glass with Code "H" bend insensitive additive will be used.		
	Berk-Tek	LTR12B024AB0403-F1(COR28E+)	24f Sm Indoor/Outdoor Lt Riser W/Corning 28e+
	Berk-Tek	LTR12B048AB0403-F1(COR28E+)	48f Sm Indoor/Outdoor Lt Riser W/Corning 28e+
	Berk-Tek	LTR12B072AB0403-F1(COR28E+)	72f Sm Indoor/Outdoor Lt Riser W/Corning28e+
	Berk-Tek	LTR12B144AB0403-F1(COR28E+)	144f Sm Indoor/Outdoor Lt Riser W/Corning28e+
	Berk-Tek	LTR12B288AB0403-F1(COR28E+)	288f Sm Indoor/Outdoor Lt Riser W/Corning 28e+

Infrastructure Parts List (Not for Structured Cabling Solutions)

	Manufacturer	Model/Part Number	Description
Fiber - Cable - Outdoor			
	Corning	024ZU4-T4722D20	24-Strand Altos - SMF-28 Ultra - Loose Tube, Gel Free All-Dielectric Outdoor Fiber
	Corning	048ZU4-T4722D20	48-Strand Altos - SMF-28 Ultra - Loose Tube, Gel Free All-Dielectric Outdoor Fiber
	Corning	072ZU4-T4722D20	72-Strand Altos - SMF-28 Ultra - Loose Tube, Gel Free All-Dielectric Outdoor Fiber
	Corning	144ZU4-T4722D20	144-Strand Altos - SMF-28 Ultra - Loose Tube, Gel Free All-Dielectric Outdoor Fiber
	Corning	288ZU4-T4722D20	288-Strand Altos - SMF-28 Ultra - Loose Tube, Gel Free All-Dielectric Outdoor Fiber
Fiber - Cleaners			
	Cletop	14100500	Type A connector cleaning system (SC,FC,ST…)
	Cletop	14100600	Type B connector cleaning system (LC, MU)
	Cletop	14100700	Replacement reel, blue
	Corning	TKT-CLEAN-MFC	Fiber Cleaning Tool Kit
Fiber - Couplers			
	Varies	Coupler	SC/APC to ST Singlemode coupler
	Varies	Coupler	SC/APC to ST multimode coupler
	Varies	Coupler	SC/UPC to ST singlemode coupler
	Varies	Coupler	SC/UPC to ST multimode coupler
	Varies	Coupler	LC to SC/APC singlemode coupler
	Varies	Coupler	LC to SC/APC multimode coupler
	Varies	Coupler	LC to SC/UPC singlemode coupler
	Varies	Coupler	LC to SC/UPC multimode coupler
	Varies	Coupler	LC to LC singlemode coupler
	Varies	Coupler	LC to LC multimode coupler
Fiber - Wall-Mount Patch Panels			
	Bejed	BJ-2006A	19 inch, 72 port fully populated fiber optic patch panel with SC/APC couplers and splice trays
	Bejed	BJ-2106A-001-09	48 port, wall mount fully populated SC/APC couplers and splice trays (New)
	Bejed	BJ-2106B-002	48 port, wall mount fully populated SC/APC couplers (Old)
	Bejed	BJ-2102	144 Single Density/ 288 Double Density
	Corning	ICH-6P	Industrial Connector Housing (ICH)
	Corning	ICH-12P	Industrial Connector Housing (ICH)

Infrastructure Parts List (Not for Structured Cabling Solutions)

	Manufacturer	Model/Part Number	Description
Fiber - Rack-Mount Patch Panels			
	Bejed	BJ-2113B	19 inch, 24 port fully populated fiber optic patch panel with LC/UPC couplers and splice trays
	Bejed	BJ-1940	144 Single Density/ 216 Double Density fully populated fiber optic patch panel with LC/UPC couplers and splice trays
	Corning	CLSSC-01U	12 Single Density/23 Double Density
	Corning	CH4U8P24-B3-0RE000	144 Single Density/ 216 Double Density fully populated fiber optic patch panel with LC/UPC couplers and splice trays
Fiber - Parts			
	Corning	LC/SCAPC coupler	Fiber optic coupler
	Corning	LC/SCUPC Coupler	Fiber optic coupler
Fiber - Test Equipment			
	AFL	Fsm-40s (Arc Fusion Splicer)	Fiber Optic Fusion Splicer
	AFL	Fujikura 70s	Fiber Optic Fusion Splicer
	Exfo	Tg-300 Fiberfinder Tone Generator	Fiber Circuit Finder
	Exfo	Lfd-300b Fiberfinder Live Fiber Detector	Fiber Circuit Finder
	Exfo	Ftb-1 (Expo Connect Compatible)	Optical Time Domain Reflectometer
	Fluke Networks	Optifiber (Certifying OTDR)	Optical Time Domain Reflectometer
	Fluke Networks	Versiv	Optical Time Domain Reflectometer
	Fluke Networks	Otdr Launch Cable Box	Fiber Optic Launch Box
	Jdsu	T-Berd 2000	Optical Time Domain Reflectometer
	Noyes	AFL Ols4 (Optical Laser Source With Wave Id)	Fiber Optic Light Source
	Noyes	AFL Ols4 (Optical Power Meter)	Fiber Optic Power Meter
	Noyes	Vs300	400 Fiber Microscope
	Telnix Velocity	Es12-500	Fiber Optic Connector Converter Box
Firestop			
	Hilti	CFS-P PA	Firestop Putty Pad - or equivalent
	Hilti	CP 618	Firestop Putty Stick - or equivalent
	Hilti	CFS-D 1-inch	Firestop Cable Disc - or equivalent
	Hilti	CFS-CC	Firestop Cable Collar - or equivalent
	Hilti	CFS-PL	Firestop Plug - or equivalent
	Hilti	CP-637	Firestop Mortar - or equivalent
	STI Firestop	EZD44S	EZ Path-44 pathway only
	STI Firestop	EZDP44S	EZ Path-44 Kit for finished walls
	STI Firestop	EZP544W	EZ Path-44, adjustable 1-5 gang wall plate, no device
	STI Firestop	RFG1	Ready Firestop Grommet - for 1 cable
	STI Firestop	RFG2	Ready Firestop Grommet - for 2-4 cables
	STI Firestop	FS100	1" Ready® Sleeve Pathway Kit
	STI Firestop	FS200	2" Ready® Sleeve Pathway Kit

Infrastructure Parts List (Not for Structured Cabling Solutions)

	Manufacturer	Model/Part Number	Description
	STI Firestop	FS400	4" Ready® Sleeve Pathway Kit
	STI Firestop	LCI300	Fire Rated UL Caulk 10.1oz tube
	STI Firestop	SSP100	Fire Rated UL Putty - sleeve 22Cu Inches
	STI	RFG1	Two-piece split cable grommet Firestop .27 OD
	STI	RFG2	Two-piece split cable grommet Firestop .53 OD
Floor Monuments			
	Carlon	Poke-Thru Device	Model numbers vary with options - See LAWA
	Hubbell	Poke-Thru Device	Model numbers vary with options - See LAWA
	Platt	Poke-Thru Device	Model numbers vary with options - See LAWA
Gloves			
	Best-N-Dex	7005p	Medium Nitrile gloves powdered
	Best-N-Dex	7005p	Large Nitrile gloves powdered
	Best-N-Dex	7005p	Xlarge nitrile gloves powdered
	Best-N-Dex	7005pf	Medium Nitrile gloves powder free
	Best-N-Dex	7005pf	Large Nitrile gloves powder free
	Best-N-Dex	7005pf	Xlarge nitrile gloves powder free
Grounding - Telecom Grounding Buysbars (TGB)			
	Chatsworth	CPI 13622 Series	Telecom Grounding busbar
	Pentair Erico	TGBA20L12PT	Telecom Grounding busbar
Grounding - Telecom Main Grounding Buysbars (TMGB)			
	Chatsworth	CPI 40153 Series	Telecom Main Grounding busbar
	Pentair Erico	TMGBA24L33PT	Main Grounding busbar - Tin Plated
GPS - Test Equipment			
	Trimble	Geo 7x	GPS Locator
HVAC - MPOE's			
	Liebert	PDX PX029 Direct Expansion	8 ton units or most current equivalent Liebert model for air conditioning unless calculated loads determine that multiple combinations of Liebert PX018, PX023, or PX029 unit are required.
	Liebert	Liqui-tect Two Channel Leak Detection System	Leak Detection System
HVAC - IT Rooms			
	Liebert	PDX PX018 Direct Expansion	5 ton units or most current equivalent Liebert model for air conditioning unless calculated loads determine that a larger Liebert PX023 or PX029 unit is required.
	Liebert	Liqui-tect Two Channel Leak Detection System	Leak Detection System

Infrastructure Parts List (Not for Structured Cabling Solutions)

	Manufacturer	Model/Part Number	Description
Innderduct - Fabric			
	Maxcell	MXC3456XX1000	Fabric Innerduct - Part number varies by length
Innderduct - HDPE			
	Carlon	A340F	1" Orange coupler for innerduct
	Carlon	A353F	1" Orange adapter for innerduct
	Carlon	CC122	PVC conduit cutter/innerduct
	Carlon	CE4X1-1000	3/4" Plenumguard corrugated innerduct orange (1000 feet reel w/out pull tape)
	Carlon	CE4X1-350	3/4" Plenumguard corrugated innerduct orange (350 feet reel w/out pull tape)
	Carlon	CF4X1C-500	1" Orange Plenum rated innerduct
	Eastern	PDPU1000F1000R	1" Plenum Innerduct
	Eastern	PDPU1250F1000R	1 ¼" Plenum Innerduct
	Eastern	PFCSP1000	1" Coupler - Plenum
	Eastern	PFCSP1250	1 ¼" Coupler - Plenum
Innderduct - Removal			
	Conduit Space Recovery Systems	Contact Company for pricing	Innerduct Removal
J-Hooks			
	B-Line	BCH32	J-Hook 2"
	B-Line	BCH64	J-Hook 4"
	B-Line	BCH12-W2	J-Hook 3/4" w/wire clip
	B-Line	BCH21-W2	J-Hook 1.5" w/wire clip
	B-Line	BCH32-W2	J-Hook 2" w/wire clip
	B-Line	BCH64-W2	J-Hook 4" w/wire clip
	Erico Caddy	CAT32HP	J-Hook 2"
	Erico Caddy	CAT48HP	J-Hook 3"
	Erico Caddy	CAT64HP	J-Hook 4"
Labeler			
	Brady	BMP71	LabelPrinter
	Brady	TLS-AC-QC	TLS 2200 Labeler with AC power and quick charger
	Brother	PT-E550	Hand Held Labeler
Labeler - Labels			
	3M	5005B	1" x 1.5" Orange Reflective Lettering System
	Brady	PSPT-500-175-WT	TLS 2200 TLS PC Link PermaSleeve Heat Shrink Wire Marker Sleeves
	Brady	18558	TLS-2200 R4310 Black Ribbon
	Brady		
	Brady	BPTL-107-427	TLS-2200 - 1.5" x 2" Laminating White Label - Bulk Box
	Brady	M71-29-423	BMP71 - 1/2" X 1.5" Permanent White Label

Infrastructure Parts List (Not for Structured Cabling Solutions)

	Manufacturer	Model/Part Number	Description
	Brady	M71-500-175-342	BMP71 - 0.8" PermaSleeve Heat Shrink Wire Marker Sleeves
	Brady	M71-R4300	BMP71 - Thermal Transfer Ribbon
	Brady	M71-R6000	BMP71 - Thermal Transfer Ribbon
	Brady	BM71C-1000-584-WT	BMP71 - 3/4" x 1" White Reflective Tape - Bulk Box
	Brady	BM71C-1000-584-OR	BMP71 - 3/4" x 1" Orange Reflective Tape - Bulk Box
	Brady	BPTL-109-427	BMP71 - 1.5" x 4" Laminating White Label - Bulk Box
	Brother	TZeS211	1/4" black on White Tape Cartridge
	Brother	TZeS221	1/4" black on White Tape Cartridge
	Brother	TZeS231	1/4" black on White Tape Cartridge
	Brother	TZeS241	1/4" black on White Tape Cartridge
	Brother	TZeS251	1/4" black on White Tape Cartridge
	Brother	TZeS651	1/4" black on White Tape Cartridge
	Brother	HSe241	3/4" Black on White Heat Shrink Cartridge
	Brother	HSe251	1" Black on White Heat Shrink Cartridge
	Brother	TZeN201	Brother P-Touch Labels - .13" / 3.5mm Black on White, "High-Density" Patch Panels
	Brother	TZeFX241	Brother P-Touch Labels - .75" / 18mm Black on White, Flex Tape - Cable Rapping
Ladders			
	Werner	T6006	6 feet twin ladder
	Werner	T6212	12 ft. ladder
	Werner	T7406	6 feet twin ladder
	Werner	T7408	8 feet twin ladder
Laser Pointers			
	Wicked Lasers	E3	200mW red laser pointer
Maintenance Holes (Hand Holes)			
	Jensen Precast		36" W x 60" L x 48" H with • Ladder • Cable mounting racks • Cable pulling eyes • Drain/sump hole • Round or rectangular covers • Torsion spring assist for rectangular covers or round covers • "COMM" welded on the top cover
Maintenance Holes (Manholes)			
	Jensen Precast		72" W x 96" L x 84" H with • Ladder • Cable mounting racks • Cable pulling eyes • Drain/sump hole • Round or rectangular covers • Torsion spring assist for rectangular covers • "COMM" welded on the top cover

Infrastructure Parts List (Not for Structured Cabling Solutions)

	Manufacturer	Model/Part Number	Description
Pull Ropes			
	ContractorsRope	Varies	Polypropylene or equivalent
Racks			
	B-Line	SB556084XUFB	7' x 19" Equipment Rack, 2 Post Black
	B-Line	SB558084XUFB	7' x 23" Equipment Rack, 2 Post Black
	B-Line	SB838084CFB	4-post 19" Equipment Rack, square hole rails for cage nuts 7ft, adjustable depth 30-36"
	B-Line	SB838084DFB	4-post 19" Equipment Rack, square hole rails for cage nuts 7ft, adjustable depth 36-42"
	B-Line	SB708195418FB	19"w x 54"h x 18"d Wall Swing Rack, Black
	Chatsworth	11583-719	Flush Mounted 2RU wall bracket Black
	Chatsworth	11583-719	Flush Mounted 2RU wall bracket Black
	Chatsworth	11754-719	Flush Mounted 6RU wall bracket Black
	Chatsworth	11754-719	Flush Mounted 6RU wall bracket Black
	Chatsworth	12309-702	2RU 3" deep rack extenders
	Chatsworth	12309-703	3RU 3" deep rack extenders
	Chatsworth	12309-705	5RU 3" deep rack extenders
	Chatsworth	12311-702	2RU 1.5" deep rack extenders
	Chatsworth	12311-703	3RU 1.5" deep rack extenders
	Chatsworth	12311-705	3 RU 1.5" deep rack extenders
	Chatsworth	40604-001	Rack Installation kit, Concrete floor 3/8"
	Chatsworth	40604-003	Rack Installation kit, Concrete floor 1/2"
	Chatsworth	12638-001	10-32 Phillips zinc screws (pkg 50)
	Chatsworth	12639-001	12-24 Phillips black screws and cage nuts (pkg 25)
	Chatsworth	40605-005	12-24 Phillips Rack screws black (pkg 50)
	Chatsworth	483-5-3-1-01	Relay Rack. Request 10-32 tapped holes
Rack - Screws			
	B-Line	E2MA1032PHMS100	10-32 Phillips clear zinc rac screws (pkg 100)
	B-Line	E2MA1224PHMS100	12-24 Phillips clear zinc rac screws (pkg 100)
Safety Glasses			
	Pyramex	CORDS1A	Safety glasses neck cord
	Pyramex	CORDS7E	Safety glasses neck cord blue
	Pyramex	CORDS8A	Safety glasses neck cord breakaway
Soldering			
	Chemtronics	10-50L	Desolder braid .100", 50 ft.
	Chemtronics	2-100L	Desolder braid .030", 100 ft.
	Weller	WD1002KIT	Soldering station kit
Splice Cases			
	Corning	SCF-8C28-01-F	For up to 288-strands of Fiber
	Preformed Line Products	Coyote Closure	For up to 288-strands of Fiber

Infrastructure Parts List (Not for Structured Cabling Solutions)

	Manufacturer	Model/Part Number	Description
Split Loom			
	Panduit	CLT100N-C630	Corrugated loom tubing slit wall, 1" (25.4mm) x 100' (30.5m), heat stablized black nylon 6.
	Panduit	CLT188N-3C630	Corrugated loom tubing slit wall, 1.88" (47.8mm) x 300' (91.45m), heat stablized black nylon 6.
	Panduit	SE125PSC-LR0	Fray resistant braided expandable sleeving, 1.25" (31.8mm) nominal I.D., polyethylene terephthalate, black.
	Panduit	SE150PSC-LR0	Fray resistant braided expandable sleeving, 1.50" (38.1mm) nominal I.D., polyethylene terephthalate, black.
Surface-Mount Raceway			
	Legrand	Raceway	Model numbers vary with sizes and options
	Panduit	Multi-Channel Raceway	Model numbers vary with sizes and options
	Wiremold	Plugmold	Model numbers vary with sizes and options
Tape			
	ULine	S-7189	Red vinyl tape
	ULine	S-7190	Yellow vinyl tape
	ULine	S-7191	Green vinyl tape
	ULine	S-7192	Blue vinyl tape
	ULine	S-7193	White vinyl tape
Tape - Electrical			
	Scotch 3M	Super 33+	Electrical tape
Telecom Enclosures - Indoors			
	Armarac		
	Hoffman		
Telecom Enclosures - Outdoors Permanent			
	APX Enclosures	TCDD724824S0753R	
	Hoffman	Varies	NEMA 4 Stainless Steel
Telecom Enclosures - Outdoors Temporary			
	Hoffman		Gray Powder Coat
Telephones			
	Cisco	7965 or 8831 VoIP Wall Phone	Consult LAWA for latest model
Tools - Carriers			
	CLC	1107	Tool carrier, 2 bag combo
	CLC	1161	Tool carrier, 12" big mouth
	Specialized Products	082X910	Black Tool bag Shoulder strap
	Specialized Products	SPC260B	Basic Installation Kit

Infrastructure Parts List (Not for Structured Cabling Solutions)

	Manufacturer	Model/Part Number	Description
Tools - Handtools			
	Channel Lock	460	16 inch Pliers tongue and groove
	Channel Lock	307-7	Nutbuster pliers
	Channel Lock	440, 420, 426	Pliers gift set
	Craftsman	009-34855	44 pc. 1/4 inch drive US/Metric socket set.
	Dewalt	DC011	Heavy duty worksite radio/charger
	Dewalt	DC9096	18v battery pack
	Dewalt	DC920KA	1/2" Drive 18vdc Cordless Drill
	Dewalt	DC920KA	1/2" Drive 18vdc Cordless Drill
	Dewalt	DW1167	17 Piece black oxide drill bit set
	Dewalt	DW1956	16 piece pilot point drill bit set
	Dewalt	DW236	Heavy Duty 1/2" VSR Drill corded
	DeWalt	DW5700	3/8" Carbide tipped spline shank hammer drill bit
	DeWalt	DW5703	1/2" Carbide tipped spline shank hammer drill bit
	DeWalt	DW5709	5/8" Carbide tipped spline shank hammer drill bit
	DeWalt	DW5714	3/4" Carbide tipped spline shank hammer drill bit
	DeWalt	DW5719	7/8" Carbide tipped spline shank hammer drill bit
	DeWalt	DW5721	1" Carbide tipped spline shank hammer drill bit
	Klein Tools	32477	10 in 1 screwdriver
	Klein Tools	32525	Tamperproof 32 bits block
	Klein Tools	32526	Standard 32 bit block
	Klein Tools	40053	Journeyman Utility Gloves Large
	Klein Tools	40054	Journeyman Utility Gloves XLarge
	Klein Tools	40058	Journeyman Framer gloves Large
	Klein Tools	40059	Journeyman Framer Gloves XLarge
	Klein Tools	63041	Standard cable cutter
	Klein Tools	63047	Communications cable cutter
	Klein Tools	63130	Bolt cutter 1/2"
	Klein Tools	J1005	Journeyman crimping/cutting tool
	Klein Tools	J2000-9NECRTP	9" high leverage side cutting pliers connector crimping and fish tape pulling
	Klein Tools	J2000-9NETP	Journeyman high leverage side-cutting/fish tape pulling pliers
	Klein Tools	J63050	Journeyman high leverage cable cutter
	Klein Tools	S-12H	12 inch Grip-it strap wrench
	Klein Tools	S-18H	18 inch Grip-it strap wrench
	Klein Tools	56007	Stainless steel fishtape 125'
	Klein Tools	56009	Fiberglass fishtape 50'
	Klein Tools	56008	Stainless steel fishtape 240'
	Klein Tools	56010	Fiberglass fishtape 100'
Tools - Powder Actuated			
	Hilti	244222	DX 460 with Magazine and single base plate KIT
	Hilti	371661	X-PT 460 Modular Pole Tool
	Hilti	373300	X-460-P10 Piston
	Hilti	373319	X-460-F10 Fastener Guide

Infrastructure Parts List (Not for Structured Cabling Solutions)

	Manufacturer	Model/Part Number	Description
	Hilti	3429062	1 1/4" fastener (pin) with 15mm washer and load (27 Caliber Yellow) (QTY 1000)
	Hilti	50352	.27 cal short cartridge yellow
	Hilti	50353	.27 cal short cartridge red
	Hilti	3442012	12ga wire with 8' fastener and load (27 Caliber Yellow) (QTY 1000)
UPS's - MPOE - 208V Floor-Mount			
	Liebert	NX 38SB030C0CHX	Or most current equivalent Liebert model per calculated load. Include internal VRLA battery capacity rated to 10 minutes at full load w/ disconnect facility for maintenance. UPS shall be packaged in a single 24" wide cabinet with automatic continuous static transfer switch and internal manual bypass. Include seismic anchoring and (1) OC-485 Webcard to interface w/ SiteLink system. Connect 120/208V output to single wall-mounted panelboard.
UPS's - MPOE - 208V Floor-Mount Battery Cabinet			
	Liebert	38BP030RHX1BNR	Or most current equivalent Liebert model. Include DC cables so that 27" battery cabinet can be directly bolted to right side of UPS cabinet. Include seismic anchoring.
UPS's - MPOE - External Bypass			
	Liebert	38MB0300CC6AL	Or most current equivalent Liebert model. Include interconnecting cables for bolting to left side of UPS. Cabinet shall be 27" wide with single rotary switch interlocked for make-before-break manual transfers. Include seismic anchoring.
UPS's - MPOE - Sitelink Remote Monitoring Unit			
	Liebert	SiteScan System	With Sitescan Web software via Transmission control Protocol/Internet Protocol (TCP/IP).

Infrastructure Parts List (Not for Structured Cabling Solutions)

	Manufacturer	Model/Part Number	Description
UPS's - IT Room - 208V Floor-Mount			
	Liebert	NX 38SB020C0CHX	Or most current equivalent Liebert model per calculated load. Include internal VRLA battery capacity rated to 18 minutes at full load w/ disconnect facility for maintenance. UPS shall be packaged in a single 24" wide cabinet with automatic continuous static transfer switch and internal manual bypass. Include (1) OC-485 Webcard to interface w/ SiteLink system. Include (1) external maintenance bypass/transformer cabinet, model Liebert 38MB0200AC6DL or most current equivalent Liebert model. Include interconnecting cables for bolting to left side of UPS. Cabinet shall be 27" wide with 480V input isolation transformer and single rotary switch interlocked for make-before-break manual transfers. Include seismic anchoring for both cabinets. Connect 120/208V UPS output to single wall- mounted panelboard.
UPS's - IT Room - 208V Floor-Mount Battery Cabinet			
	Liebert	38BP020RHX1BNR	Or most current equivalent Liebert model. Include DC cables so that 27" battery cabinet can be directly bolted to right side of UPS cabinet. Include seismic anchoring.
UPS's - IT Room - External Bypass			
	Liebert	38MB0200CC6AL	Or most current equivalent Liebert model. Include interconnecting cables for bolting to left side of UPS. Cabinet shall be 27" wide with single rotary switch interlocked for make-before-break manual transfers. Include seismic anchoring.
UPS's - IT Room - Sitelink Remote Monitoring Unit			
	Liebert	SiteScan System	With Sitescan Web software via Transmission control Protocol/Internet Protocol (TCP/IP).
UPS's - Rack-Mount			
	APC	208V Input/208 Output 5000 kVA Smart UPS	Rack-Mount UPS
	APC	Expandable Battery Packs	Rack-Mount Battery Packs
	APC	208V/120V Step Down Transformer	Transformer to obtain 120V outlets
UPS's - Rack-Mount			
	APC	SUM1500RMXLI2U	APC UPS unit (includes management interface card)
	APC	SUM48RMXLBP2U	Battery Packs

Infrastructure Parts List (Not for Structured Cabling Solutions)

	Manufacturer	Model/Part Number	Description
Velcro			
	AMP	1375253-6	Blue velcro cable ties 8" (pkg of 10)
	AMP	1375254-2	Black velcro cable ties 12" (pkg of 10)
	AMP	1375254-6	Blue velcro cable ties 12" (pkg of 10)
	AMP	1375256-2	Black Velcro Flame Retardant cable ties (pkg of 10)
	Leviton	43115-75	75' Velcro Roll
Wire Basket			
	B-Line	FT4X4X10	4"x 4"x10' FLEXTRAY Cable Tray
	B-Line	FT4X6X10	4"x 6"x10' FLEXTRAY Cable Tray
	B-Line	FTSTLCZN	Fast Splice Connector - Tab-Loc Connector
	B-Line	FTSCHEG	Connecting Hardware
	B-Line	FTSHAKEG	Horizontal Adjustable Kit
	B-Line	FTSBKZN	Splice Bar Kit
	B-Line	Z BRKTGS	Z Bracket
	B-Line	WB46HZN	Flip Clip - attach threaded rob to tray sides
	B-Line	FTB06CT	Center Trapeze Support - 6"
	B-Line	FTB06CSGLV	6" Shelf Bracket Wall Triangle
	B-Line	ATR3/8X120	3/8" ATR Threaded Rod - 10'
	B-Line	B22SGALV120	U Channel - 1 5/8" X 10' slotted hole
	B-Line	3/8HN 3/8FW	3/8" Nut with flat washer
	B-Line	B444-3/8	Beam Clamps - 3/8" - 16